PX227

PX227-L0

DMX/0-10V Interface 8ch

User manual

Table of Contents

1 Description.....4
2 Safety conditions.....5
3 Connectors and control elements.....6
4 Programming.....7
4.1 Button features.....7
4.2 Information parameters.....7
4.3 Setting the DMX address.....8
4.3.1 Setting the DMX address – L0 version.....9
4.4 Characteristics of the output channels.....10
4.4.1 Characteristics of the output channels – version L0.....12
4.5 Response to the loss of DMX signal.....14
4.6 Smoothing function.....18
4.7 Operation mode.....19
4.8 Screen blanking.....20
4.9 Output voltage preview.....21
4.10 Default settings and device errors.....22
4.10.1 Restore default settings.....23
4.10.2 Error message.....24
5 Mounting.....25
6 Menu scheme.....26
7 Menu scheme – L0 version.....27
8 RDM – available parameters.....28
9 Device update.....30
10 DMX signal connecting.....31
11 Connection scheme.....32
12 Dimensions.....33
13 Technical data.....34

Manufacturer reserves the right to make modifications in order to improve device operation.

PXM Marek Żupnik sp.k.
Podłęże 654
32-003 Podłęże
BDO register number 000005972

tel. +48 12 385 83 06
mail: info@pxm.pl
www.pxm.pl

Rev.2-2
06.12.2024

1 Description

Demultiplexer DMX-512 signal on 0 – 10V.

The PX227 is designed to process the DMX512 signal to control the eight analog 0 – 10V outputs with accuracy ±3%.

In addition to simple decoding DMX signal the PX227 allows to select the characteristics of control and program unit reacts to loss of DMX signal. Individually programmable parameters allow to define independent for each channel DMX address from range 1 – 512. What is more it is possible to arbitrarily assign multiple channels to a single address.

DMX / 0-10V Interface 8ch has been placed in a housing adapted for mounting on a 35mm DIN rail and is powered by a safe voltage of 12 – 24V DC.

From software version 2.06, support for the RDM protocol has been implemented.

NOTE! The following user manual applies to devices from serial number 21290007.

2 Safety conditions

PX227 is a device powered by low voltage equal to 12 – 24V DC; however, please observe the following safety rules during its installation and use:

1. The device mat be connected to 12 – 24V DC with current-carrying capacity compatible with technical data.
2. All the conductors should be protected against mechanical and thermal damage.
3. In the event of damaging any conductor, it should be replaced with a conductor of the same technical data.
4. Only use a shielded cable for connecting the DMX signal.
5. All repairs and connection of outputs or DMX signal can only be made with cut off power supply.
6. PX227 should be strictly protected against contact with water and other liquids.
7. All sudden shocks, particularly dropping, should be avoided.
8. The device cannot be turned on in places with humidity exceeding 90%.
9. The device cannot be used in places with temperature lower than +2°C or higher than +40°C.
10. Clean with damp cloth only – when the power is off.

3 Connectors and control elements

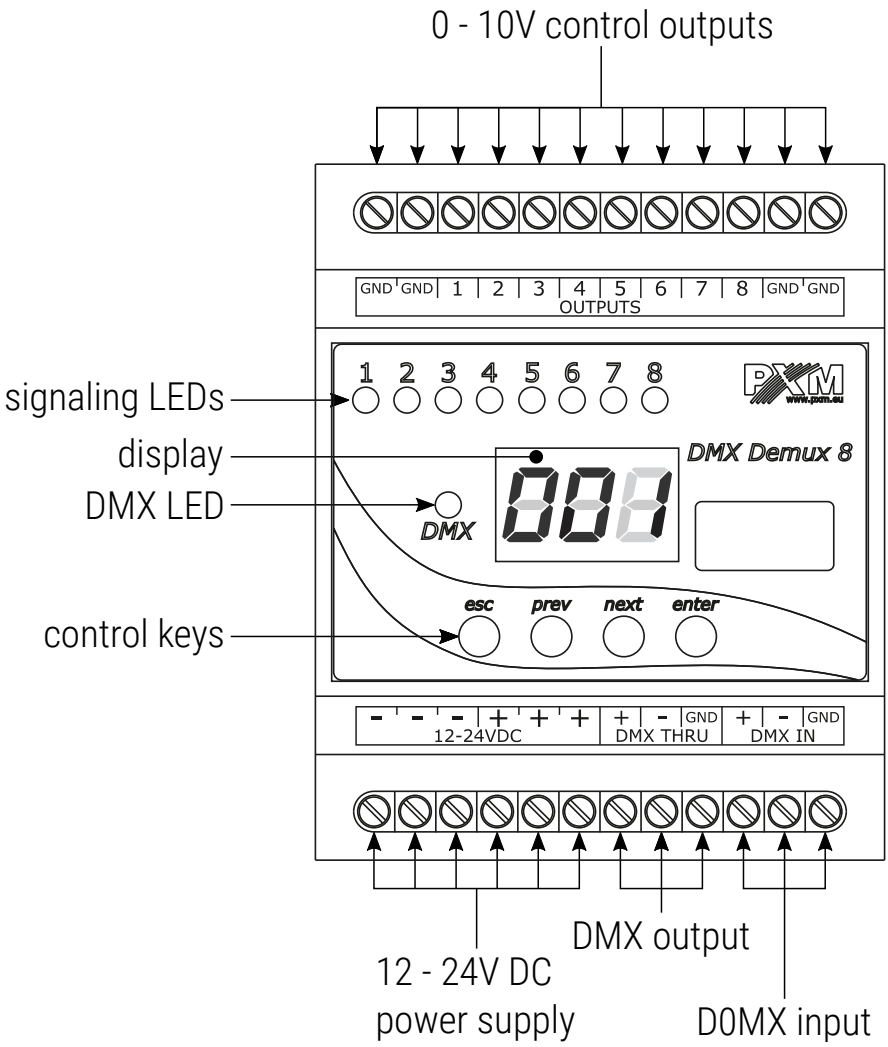

4 Programming

After switching on, the display shows the version of the program and information about the processor used (*L0*). Press *enter* to go the main menu, the display shows ***ALL*** or ***Adr*** in version *L0*. Press *prev* or *next* to select the programming menu and press *enter* to confirm.

4.1 Button features

esc – exits the currently programmed parameter without saving changes or takes you to a higher menu level

prev – takes to a lower menu lever or reduces the set values

next – takes to a higher menu level or increase the set values

enter – takes to device programming function and confirms the set values

4.2 Information parameters

In PX227-L0, the user can display the serial number on the screen of the device.

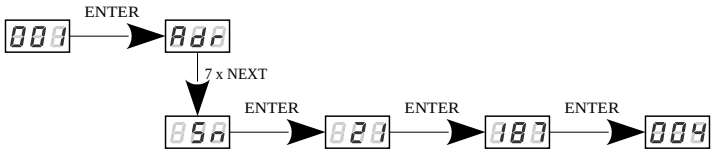

Example serial number: 21 187 004

NOTE! This parameter is available only in the version with the *L0* processor.

4.3 Setting the DMX address

The menu of the PX227 device allows to set the DMX address of the device within the range 1 – 505.

To set the DMX address as a group:

1. Set the ***Adr*** function.
2. Use the *next* or *prev* buttons to set the desired DMX address. Press the *enter* button to confirm.

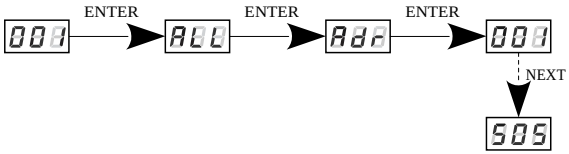

To set the DMX address individually:

1. Set the ***Ind*** function.
2. Use the *next* or *prev* buttons to select the output channel and click *enter*.
3. Use the *next* or *prev* buttons to set the desired DMX address. Press the *enter* button to confirm.

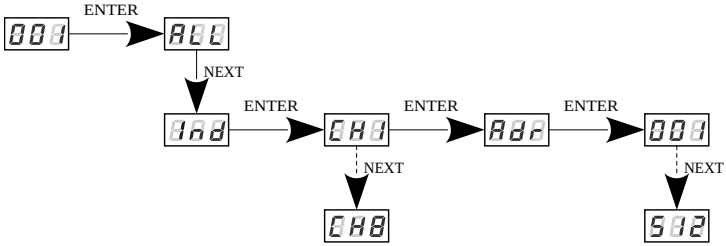

4.3.1 Setting the DMX address – L0 version

In the PX227-L0 version, the user can select a DMX address from the range 1 – 512 (when the ***Cbn*** operating mode is set to ***8ch***), it means that if the user selects the address, e.g. 510, then channels 1 – 3 will take successively addresses 510, 511 and 512. Channels 4 – 8 will be assigned to address 512.

To set the DMX address in version *L0* (PX227-L0), ***8ch*** operating mode:

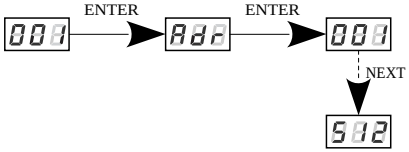

Additionally, in the *L0* version, the user by selecting ***Cbn*** (operating mode) on ***Adv*** (advanced) can set the DMX address as follows:

- ***SEQ*** – sequence – the user sets the DMX address from the range 1 – 512, and the next channels are assigned to the next DMX addresses. This means that if the user selects the address, for example: 508, then channels 1 – 5 will take successively addresses 508, 509, 510, 511 and 512. Channels 6 – 8 will be assigned to address 512.
- ***ALL*** – setting all channels on one DMX address,
- ***Ind*** – individual setting of DMX addresses for each channel.

To set the DMX address in the *L0* version (PX227-L0) ***Adv*** operation mode:

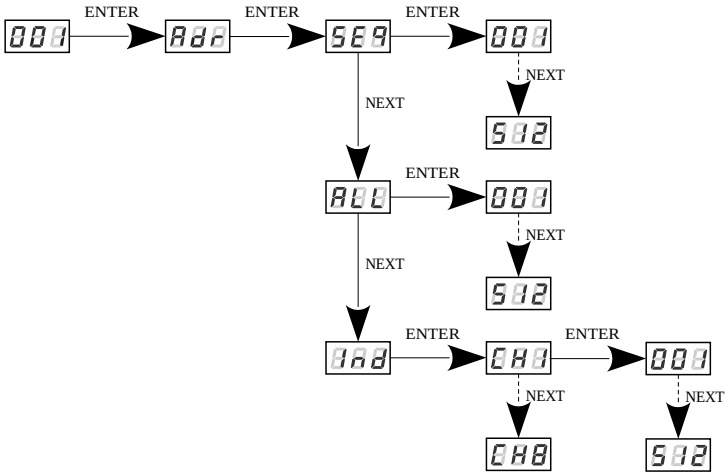

NOTE! Information whether the device is the *L0* version is displayed during device start-up.

4.4 Characteristics of the output channels

Available parameters:

- *Lin* – linear characteristic 0 – 10V,
- *FLu* – linear characteristic 1 – 10V,
- *S_P* – switching characteristic (on / off),
- *uSr* – user-defined characteristic, linear, ranging from ***Min*** to ***Max***. The minimum and maximum values can be set in the range from 0 to 10V.

To set characteristics for all channels:

1. From the boot menu, enter the ***ALL*** group setting menu.
2. Press *enter* again to be able to change settings for all channels.
3. Select ***Cur*** with the *next* button, this will allow to change the dimming characteristics of the channels.

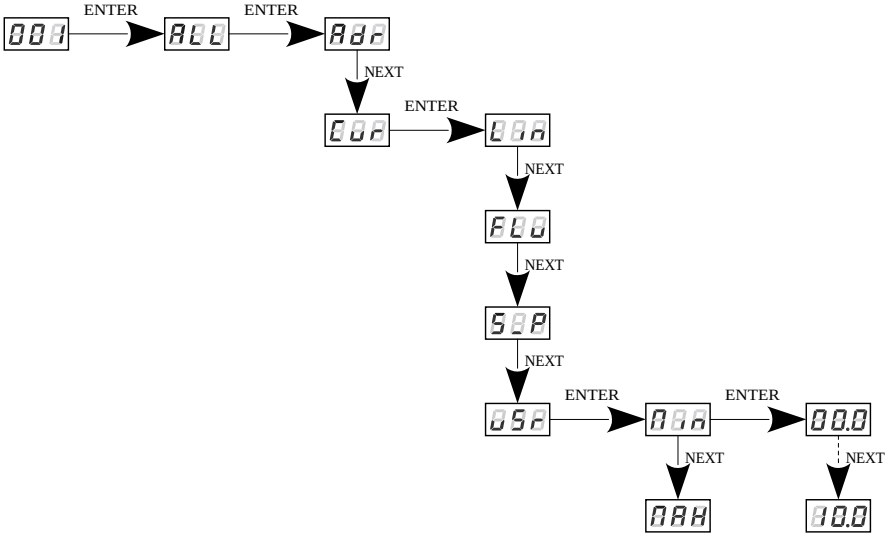

To set characteristics individually for all channels:

1. From the start menu, enter the group settings menu ***Ind***.
2. Use the *next* or *prev* buttons to select the output channel and click *enter*.
3. Select ***Cur*** with the *next* button, this will allow to change the dimming characteristics of the channels.

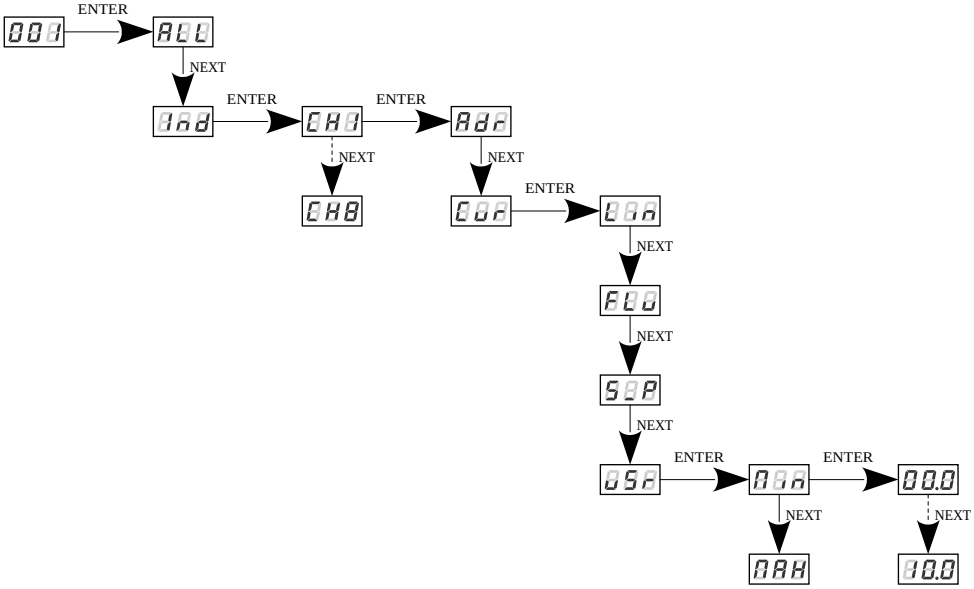

4.4.1 Characteristics of the output channels – version L0

The operating characteristics of individual outputs and all outputs in a device with an *L0* processor are set in a similar way as described in point 4.4. Characteristics of the output channels. The user can set the ***Cur*** characteristic for each channel individually by selecting ***CH1*** – ***CH8*** options or in groups for all outputs by selecting ***ALL***.

Available parameters:

- *Lin* – linear characteristic 0 – 10V,
- *FLu* – linear characteristic 1 – 10V,
- *S_P* – switching characteristic (on / off),
- *uSr* – user-defined characteristic, linear, ranging from *Min* to *Max*. The minimum and maximum values can be set in the range from 0 to 10V.

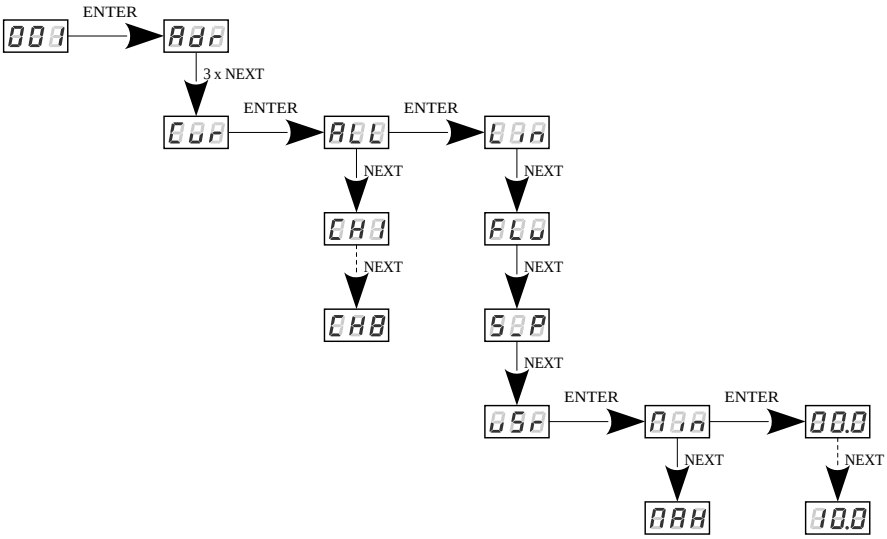

NOTE! Information whether the device is the *L0* version is displayed during device start-up.

4.5 Response to the loss of DMX signal

This function is used both to protect the system against the disappearance of DMX signal and to gain a specific state on outputs. After it has been activated, in case of a lack of DMX signal, the module will perform the selected function by itself. The reconnecting of DMX signal will automatically break the performed function, and the module will again be controlled by DMX signal.

The following options are available:

- *Pr1* – *Pr2* – starting program 1 or 2,
- *on* – switching all outputs on 100%,
- *oFF* – complete switch-off of outputs,
- *HLd* – holding the last DMX value,
- *Sc1* – *Sc4* – scene 1, 2, 3 or 4.

Up to 10 steps can be created in the program (*F01* – *F10*), in each step it is possible to define the values of output channels (*CH1* – *CH8*) in the range from 0 to 255. Additionally, in each step you can define its duration (*Spd*) in the range of 0,1 – 99,9 seconds. In the step it is also possible to set the transition smoothness (*FAd*) in the range from 0 (step transition) to 100 (completely fluid transition). It is possible to reduce the number of program steps, for this purpose, for this purpose, in step which should be last and after this step followed first step, select the *on* option in the *End* menu.

Default programs (version *L0*):

Steps	Pr1 (SPd 01.0 / FAd 050)	Pr2 (SPd 01.0 / FAd 050)
1		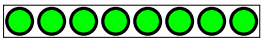
2		
3		
4	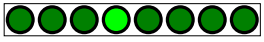	
5		
6	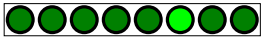	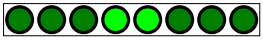
7		
8	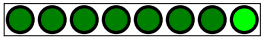	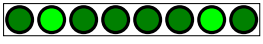
9	X	
10	X	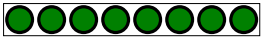

In each of the four scenes, you can statically program the values of each of the eight output channels separately in the range from 0 to 255.

Default scenes (version *L0*):

- Sc1 – all channels set to 128,
- Sc2 – all channels set to 0,
- Sc3 – all channels set to 100,
- Sc4 – all channels set to 255.

To run the function, enter the ***noS*** option:

1. From the boot menu, go to the ***noS*** settings and press *enter*.
2. Using the *next* or *prev* buttons select the behavior of the fixture on the disappearance of DMX signal.

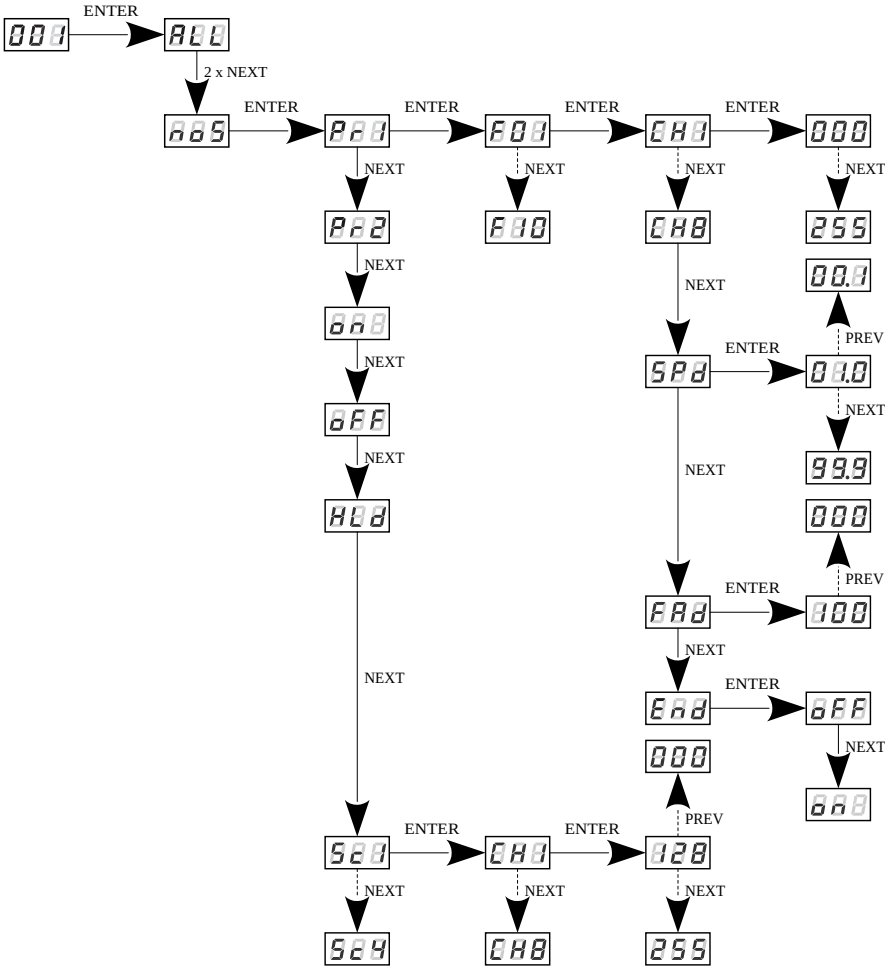

NOTE! In the *L0* version of the device, setting the response to the disappearance of the DMX signal is presented below. Information whether the device is the *L0* version is displayed during device start-up.

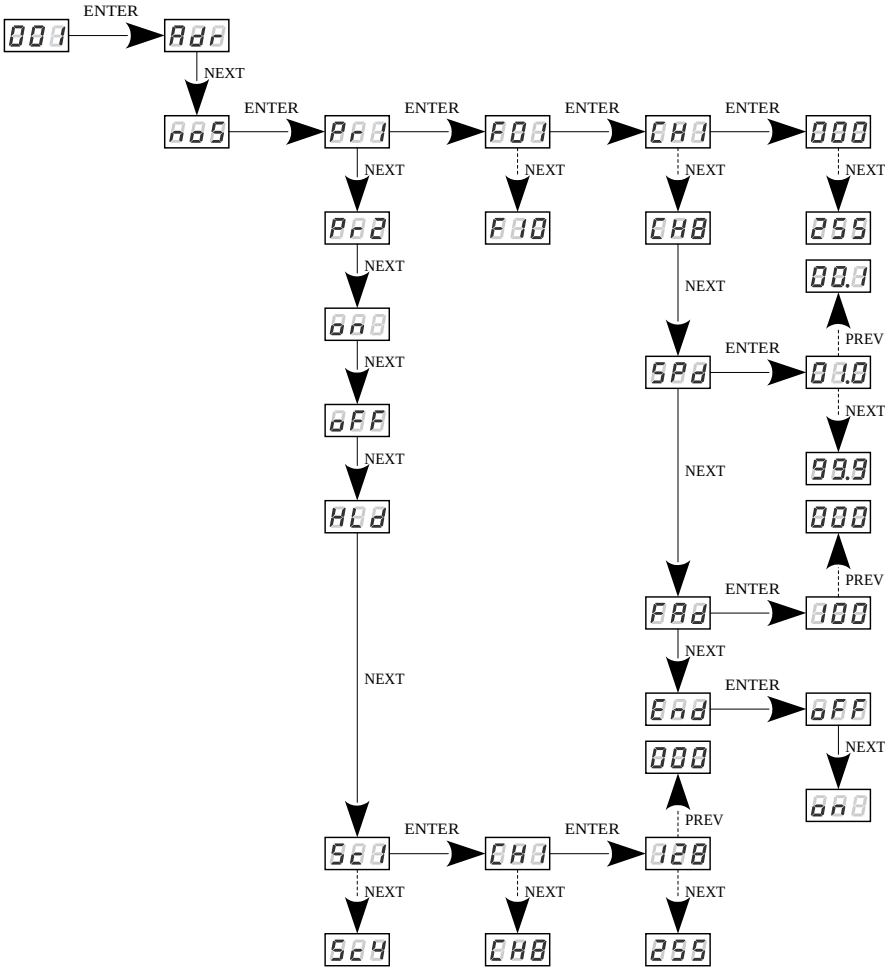

4.6 Smoothing function

The device also has the smoothing option. Smoothing allows for smooth color changes. When this option is enabled, switching between successive DMX values sent to channels is smooth, which prevents abrupt changes in voltage.

In order to start the smoothing function, enter the ***Sth*** option:

1. From the start menu go to the ***Sth*** settings and press *enter*
2. Use the *next* or *prev* buttons to select the smoothing function and confirm with the *enter* button

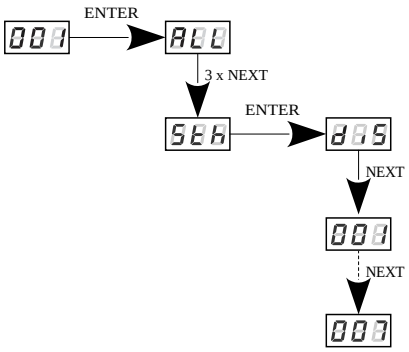

The enabled smoothing function can slightly slow down the device response to the change of DMX signal, so it is possible to switch off this option. In order to switch off smoothing, select ***diS*** parameter and confirm the selection with *enter*. The range from 1 to 7 are the levels of smoothing.

NOTE! In the *L0* version, the smoothing settings are presented below. Information whether the device is the *L0* version is displayed during device start-up.

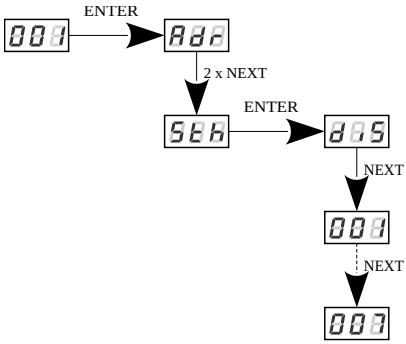

4.7 Operation mode

In the PX227-L0 device, the user can change the ***Cbn*** operating mode, which only affects the way of setting the DMX address:

- ***8ch*** – DMX address is set in groups for all channels,
- ***Adv*** – the user has at his disposal the DMX address setting:
  - ***Seq*** – sequentially,
  - ***ALL*** – one address for all outputs,
  - ***Ind*** – each output individually.

A detailed description of setting the DMX address can be found in section 4.3. Setting the DMX address.

NOTE! This parameter is available only in the version with the *L0* processor.

NOTE! By changing the working mode from *Adv* to *8ch* the DMX addresses will be set sequentially starting from the DMX address of channel 1 set in *Adv*.

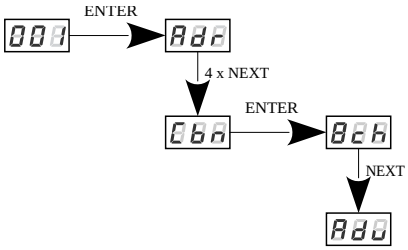

4.8 Screen blanking

The device has been equipped with the option of switching off backlight of the screen. This is provided by the *SCr* option. By using it, the display is switched off approx 60 seconds of inactivity (button unused). The device still operates without interfering with other parameters. Use any button to restore the backlight.

In order to activate the screen blanking function:

1. From the start menu enter the *SCr* settings and press *enter*
2. With *next* or *prev* change the values to *on* and confirm with *enter*

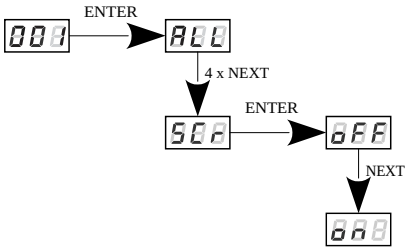

Similarly, you should follow in order to switch off this function, but then selecting *oFF*.

NOTE! In the *L0* version of the device, setting the screen blanking is presented below. Information whether the device is the *L0* version is displayed during device start-up.

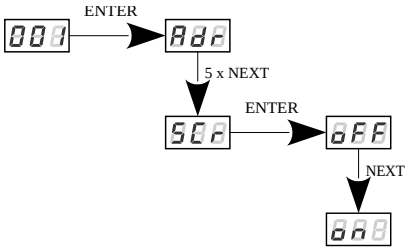

4.9 Output voltage preview

Since software version 2.09, the user has the option to display the voltage value ***vAL*** at the output. This value is approximate.

In the diagram below, the user can read that the output channel number is ~4.1V.

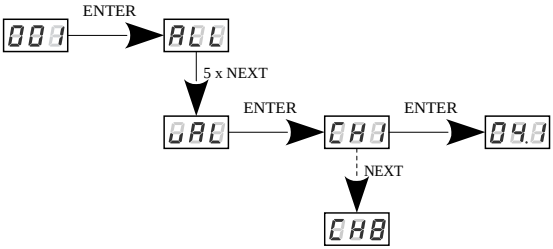

NOTE! In the *L0* device version the screen output voltage display is shown below. Information whether the device is the *L0* version is displayed during device start-up.

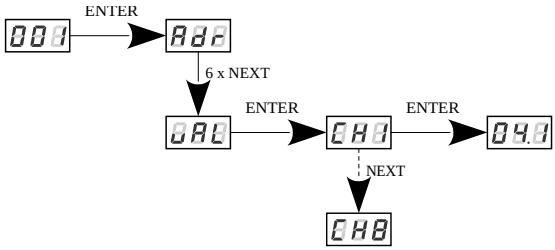

NOTE! Option available from software version 2.09.

4.10 Default settings and device errors

If you have any difficulty accessing the device menu, e.g. it is not possible to enter a particular menu level or it is necessary to restore the device to its default settings, follow the instructions below.

In the first case, when a particular menu level cannot be accessed or menu items are displayed incorrectly, this may indicate that a saving-in-memory error has occurred. In such a case, try to restore the device to its default settings before sending the PX227 / PX227-L0 to the service center. If, after restoring to its default settings, the device still does not operate correctly, please send it to our service center.

4.10.1 Restore default settings

To restore the device to its default settings, press and hold the *previous* key while switching on the device. One of the messages that will be displayed will say ***dFl***, which means successful restoring to default settings (the *previous* key has to be held down while powering on the device, until the ***dFl*** message is displayed).

If this message is accepted by pressing *enter*, the default settings will be restored. The user can also exit this menu level without restoring the default settings. In order to do this, press the *escape* key.

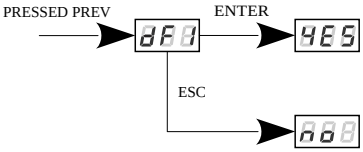

Please note that after restoring to default settings, all the operating parameters of the device will revert to the following ones:

- DMX address: ***001***
- no signal: ***oFF***
- smooth: ***diS*** (***003*** in *L0* version)
- characteristics of the output channels: ***Lin*** (on all channels)
- screen saver: ***oFF***
- *operation mode:* ***8ch***

NOTE! In the device version *L0*, restoring the factory settings is additionally available from the device menu. Information whether the device is the *L0* version is displayed during device start-up.

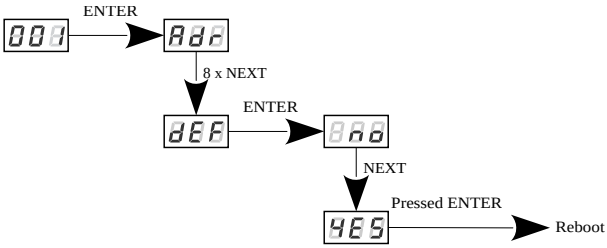

When the display shows the message *YES*, press and hold the *enter* button until the device resets.

4.10.2 Error message

The device is equipped with a built-in memory work control function. If there are problems with the memory operation on the PX227 display, the *Err* message appears – memory error.

In this situation, select the *enter* key. The device will reload the default configuration and upload it to the memory. If after this operation, the *Err* message remains on the screen, the memory is permanently damaged and the unit must be sent to the service point.

5 Mounting

PX227 is installed on the mounting rail T35 in order to provide stable position and comfortable access to the device.

Installation on the mounting rail:

1. Set PX227 diagonally to the rail by hooking the two supports on the rear panel of the unit on the upper part of the assembly strip.
2. Pull the latch down using a screwdriver.
3. Attach the device to the rail, still holding a screwdriver in a latch.
4. Release the latch.

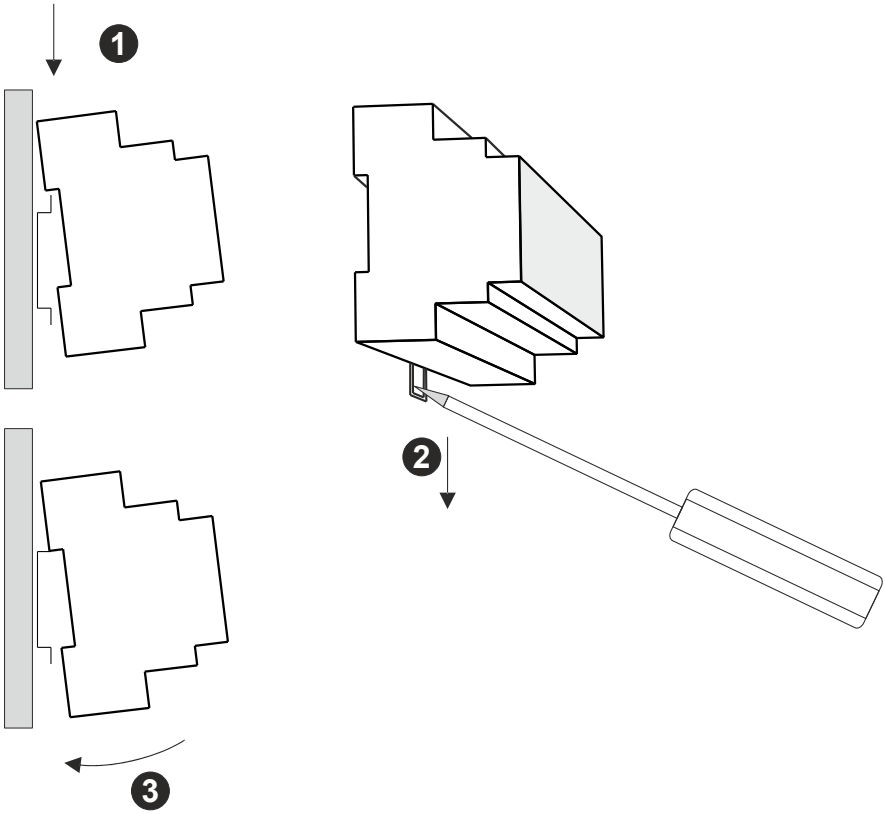

6 Menu scheme

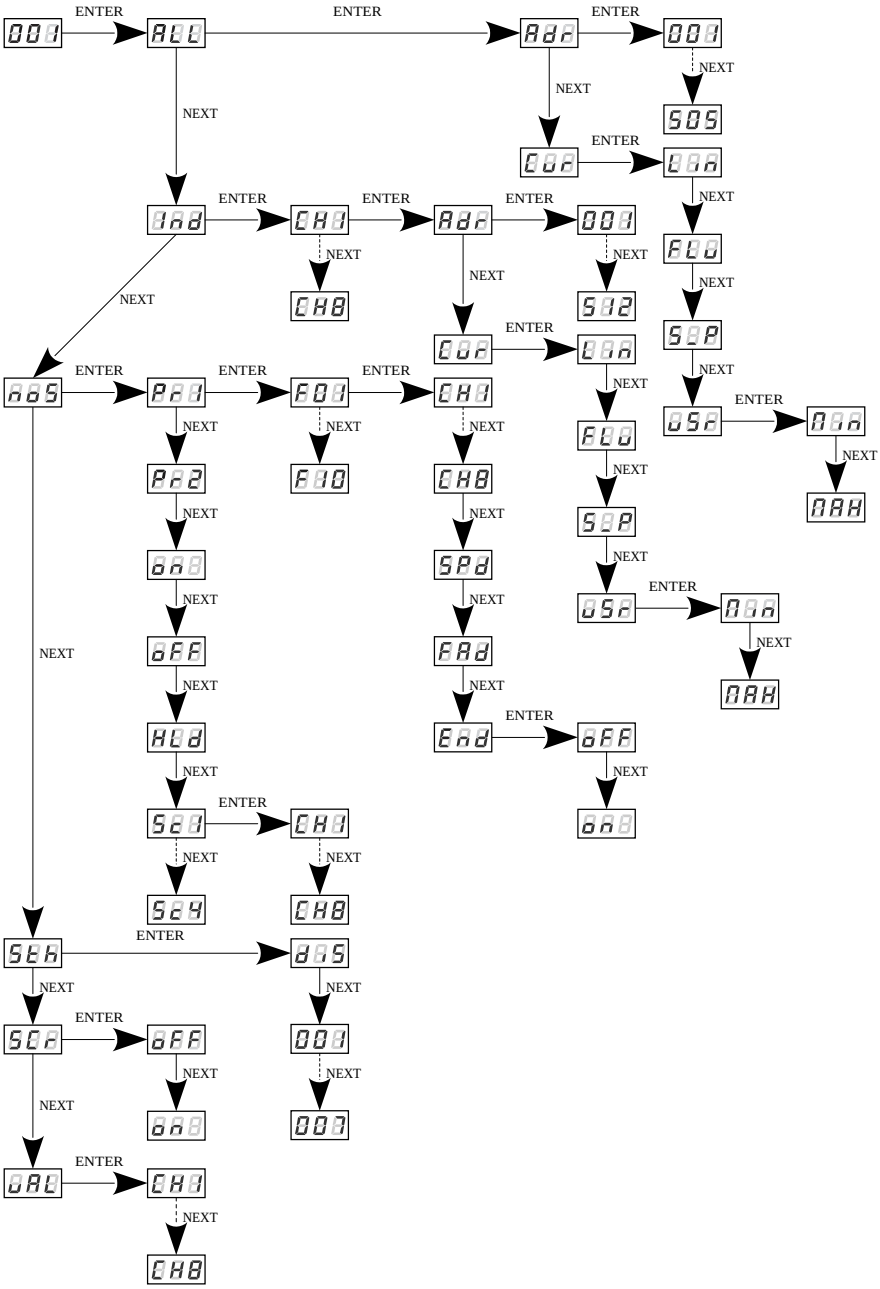

7 Menu scheme – L0 version

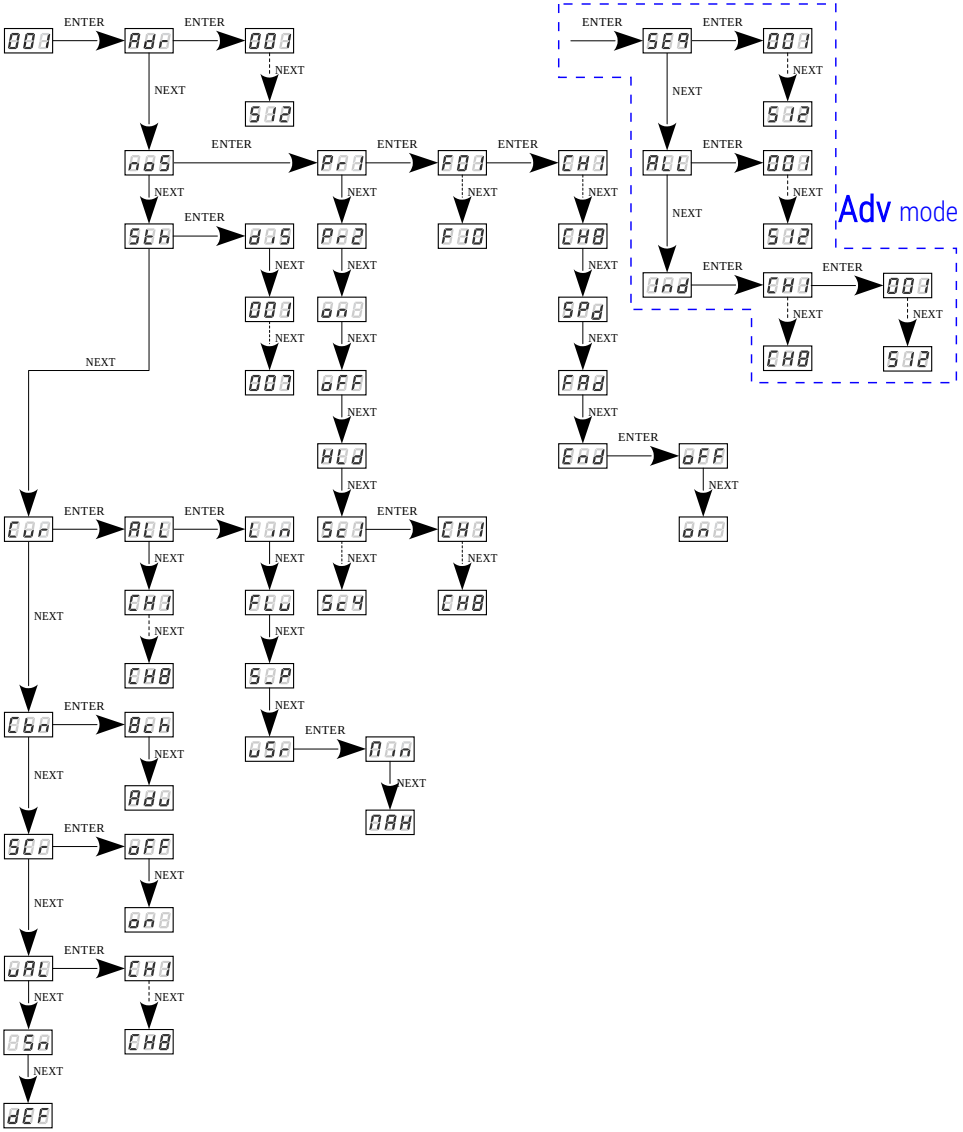

8 RDM – available parameters

The PX227 supports the DMX – RDM protocol. DMX protocol allows only of a one-way data transmission, while its extension the RDM protocol can transmit information in two directions. This makes possible to simultaneously send and receive information, and hence the possibility of monitoring activities of the compatible devices. Thanks to RDM some available settings of compatible devices may be programmed using this protocol.

List of supported RDM parameters by PX227:

Parameter name	PiD	Description
SUPPORTED_PARAMETERS	0x0050	all supported parameters
PARAMETER_DESCRIPTION	0x0051	description of additional parameters
DEVICE_INFO	0x0060	information concerning the device
SOFTWARE_VERSION_LABEL	0x00C0	firmware version of the device
DMX_START_ADDRESS *	0x00F0	DMX starting address; Range 1 – 512
IDENTIFY_DEVICE *	0x1000	device identification; Two states are possible: identification disabled (value 0x00) and identification enabled (value 0x01)
DEVICE_MODEL_ DESCRIPTION	0x0080	device description, e.g. name
MANUFACTURER_LABEL	0x0081	manufacturer description, e.g. name

Parameter name	PiD	Description
DEVICE_LABEL *	0x0082	additional device description; It is possible to enter an additional device description using up to 32 ASCII characters
FACTORY_DEFAULTS	0x0090	device default settings
PERSONALITY	0x00E0	DMX operational mode
PERSONALITY_ DESCRIPTION	0x00E1	description of individual operational modes
SMOOTH_OFF/1/2/3/4/5 *	0x801A	selecting an option for the Smooth function
NO_SIGNAL_OFF/ON/HLD/S *	0x801C	selection of operating mode for no DMX signal
OUTPUT_RANGE_MIN_0-100 *	0x804A	minimum value in the user-defined characteristic, set from 0 to 100
OUTPUT_RANGE_MAX_0-100 *	0x804B	maximum value in the user-defined characteristic, set from 0 to 100
SCREENSAVER_ON/OFF *	0x8024	screen saver setting
SERIAL_NUMBER	0x8030	device serial number
CURVE_0/1/2/3 *	0x8049	setting the characteristics of the output channels (Lin, Fluo, Switch, User)

* - editable parameter

9 Device update

The update is possible using the PX313 USB / RS485 In device – details can be found in the manual for this module. The device update was also presented in detail on our YouTube channel.



https://www.youtube.com/watch?v=lSlFGeXVR_k

NOTE! The update file is available for download from the manufacturer's website. For device version *L0*, download the firmware with the suffix *L0*.

10 DMX signal connecting

PX227 have to be connected to DMX line in serial mode, with no branches on DMX control cable. That means that DMX line, from the signal source, must be connected to ***DMX IN*** pins of PX227 and later, directly from ***DMX OUT*** pins to the next device in DMX chain.

If the PX227 is the last DMX chain receiver there should be terminator (resistor 120 Ohm) mounted between "**+**" and "**-**" pins of ***DMX OUT*** section.

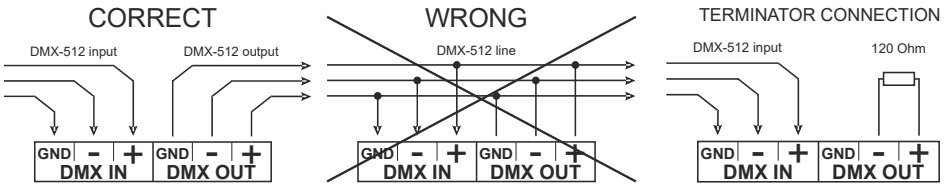

11 Connection scheme

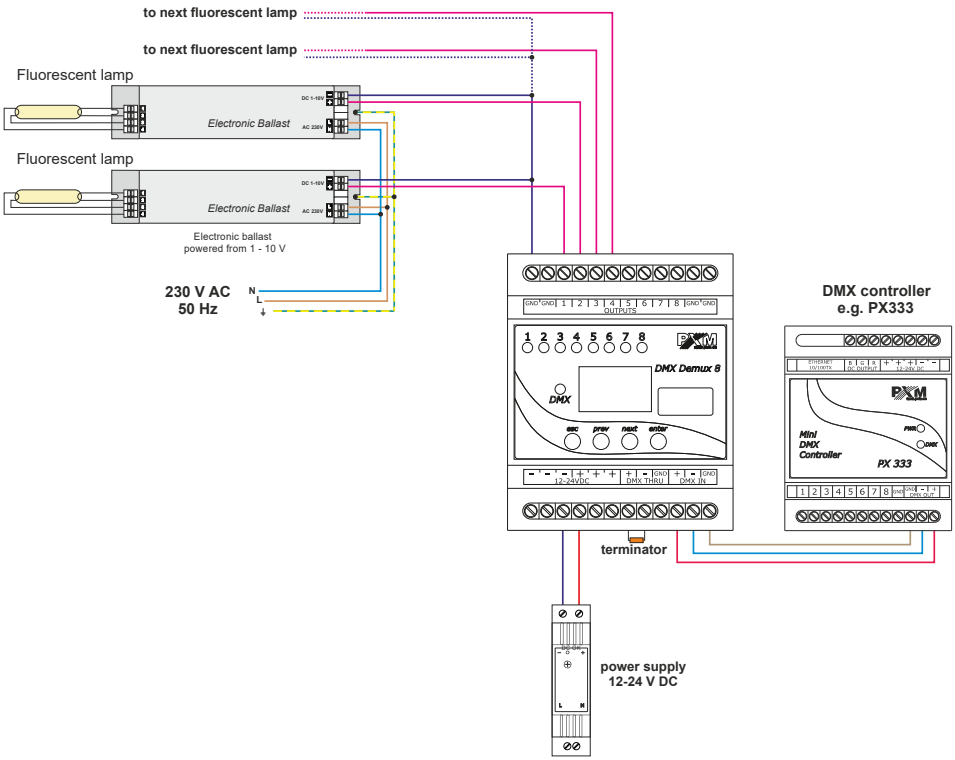

12 Dimensions

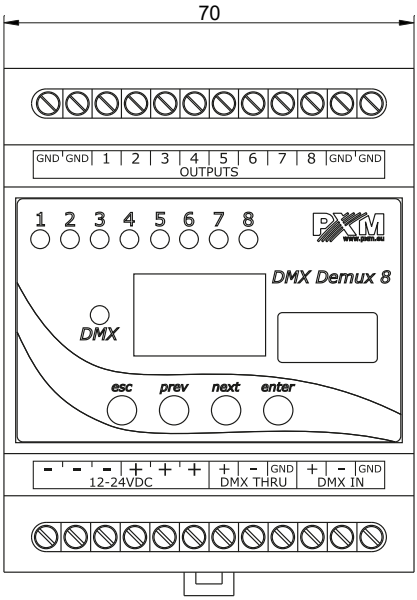

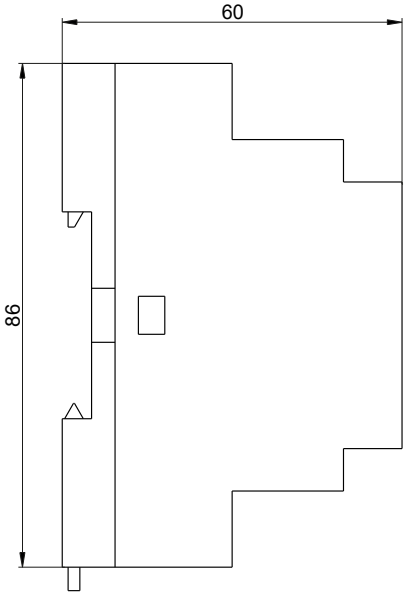

13 Technical data

type	PX227 PX227-L0
power supply	12 – 24V DC
number of DMX channels	512
RDM protocol	yes (from version 2.06)
number of output channels	8
voltage on outputs	0 – 10V (±3%)
output sockets	screw terminals
power consumption without load	max. 0.5W
outputs load	max. 30mA / channel
weight	0.14kg
dimensions	width: 70mm (4 modules) height: 86mm depth: 60mm

Podłęże, 07.06.2019

DECLARATION OF CONFORMITY

PXM Marek Żupnik spółka komandytowa
Podłęże 654, 32-003 Podłęże

we declare that our product:

Product name:	DMX/0-10V Interface 8ch
Product code:	PX227

meets the requirements of the following standards, as well as harmonised standards:

PN-EN IEC 63000:2019-01	EN IEC 63000:2018
PN-EN 61000-4-2:2011	EN 61000-4-2:2009
PN-EN IEC 61000-6-1:2019-03	EN IEC 61000-6-1:2019
PN-EN 61000-6-3:2008	EN 61000-6-3:2007

and meets the essential requirements of the following directives:

2011/65/UE DIRECTIVE OF THE EUROPEAN PARLIAMENT AND OF THE COUNCIL of 8 June 2011 on the restriction of the use of certain hazardous substances in electrical and electronic equipment
Text with EEA relevance.

2014/30/UE DIRECTIVE OF THE EUROPEAN PARLIAMENT AND OF THE COUNCIL of 26 February 2014 on the harmonisation of the laws of the Member States relating to electromagnetic compatibility (recast)
Text with EEA relevance.

PXM
Marek Żupnik spółka komandytowa
32-003 Podłęże, Podłęże 654
NIP 677-002-54-53



mgr inż. Marek Żupnik.