PX249

Audio DMX Player

User manual

Table of Contents

1 Description....3
2 Safety conditions....4
3 Connectors and control elements....5
4 Navigating the menu....6
5 Player state after turning on the device....6
6 Audio formats, memory cards and files naming....8
7 Player menu....10
7.1 Playlists....10
7.2 Audio settings....11
7.3 DMX settings....12
7.4 Additional options....14
7.5 Firmware info / default settings....15
8 Firmware update....17
9 DMX-512 control....18
9.1 Control via 4 or 5 channels....18
9.2 Control via sever or eight channels....20
10 Connection scheme....23
11 Dimensions....25
12 Technical data....26

Manufacturer reserves the right to make modifications in order to improve device operation.

PXM Marek Żupnik sp.k.
Podłęże 654
32-003 Podłęże
BDO register number 000005972

tel. +48 12 385 83 06
mail: info@pxm.pl
www.pxm.pl

Rev.2-0
02.11.2021

1 Description

The PX249 is an audio player that replaces the existing PX154 MP3 player.

The device can be controlled directly or with the use of any driver operating in the DMX-512 standard. The player can cooperate with DMX devices in 4, 5, 7 or 8 channel modes.

From the firmware version 1.18 on the SD/SDHC memory card you can place 85 or 255 tracks in the main directory on the card in the **.wav* format of any length, the only limitation is the capacity of the memory card. In addition, from firmware version 1.18 it is possible to create up to 9 playlists of 85 or 255 tracks each, which gives the possibility to play up to 765 or 2295 tracks.

Functions implemented by PX249 using DMX control allow for playback, selection of a particular song, choosing a playlist, looping one and multiple track or random playback of songs, smooth volume control, bass, treble and balance control. Additionally, there is a possibility to connect an external *START* button, which starts playback when the output is short-circuited. Moreover, the menu of the device allows for defining the behavior of the player if no DMX signal is present.

The unit is produced in a housing adapted for mounting on 35mm DIN buses.

2 Safety conditions

The PX249 Audio DMX Player is a device powered with 12 – 24V DC safe voltage. However, during its installation and use the following rules must be strictly observed:

1. The device may only be connected to 12 – 24V DC current (stabilized voltage) with current-carrying capacity compatible with technical data.
2. All the conductors should be protected against mechanical and thermal damage.
3. In the event of any conductor damaging, it should be replaced with the one of the same parameters.
4. Connection of DMX signal should be made with shielded conductor.
5. All repairs and connections of outputs or DMX signal can only be made with switched off power supply.
6. The PX249 should be strictly protected against contact with water and other liquids.
7. All sudden shocks – particularly dropping – should be avoided.
8. The device cannot be turned on in places with humidity exceeding 90%.
9. The device cannot be used in places with temperature lower than +2°C or higher than +40°C.
10. For cleaning use only a damp cloth.

3 Connectors and control elements

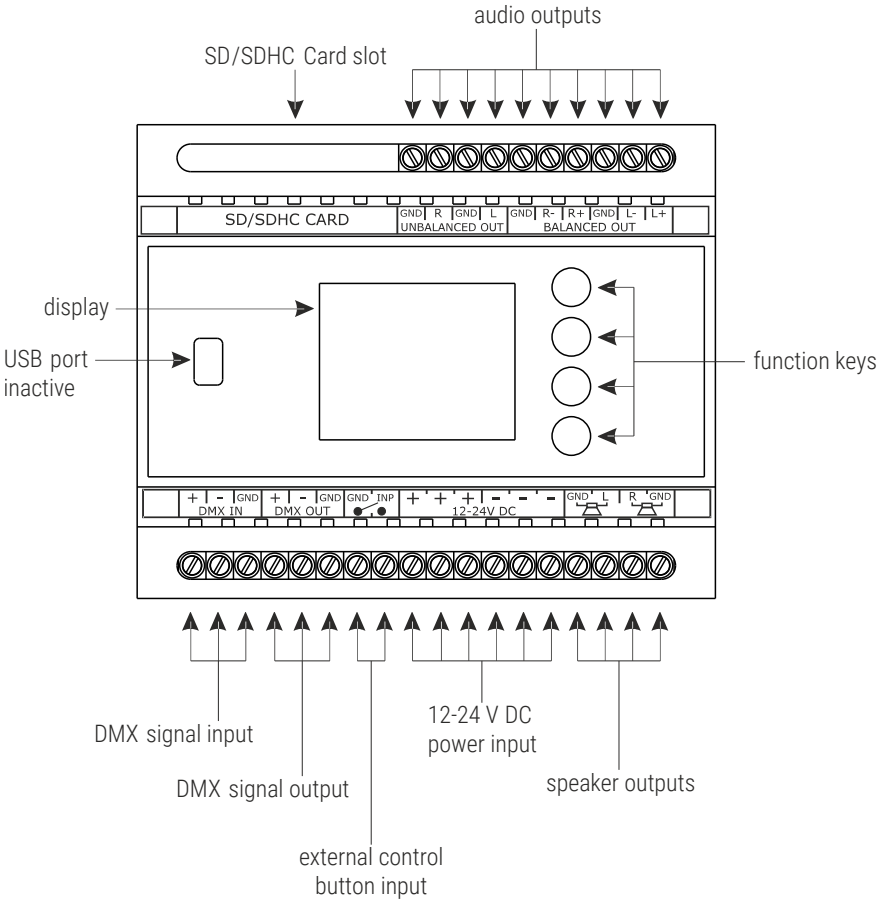

4 Navigating the menu

Navigating the menu of the device allow programmable buttons. Every button is described on the right side and their use is as follows:

escape – exits from the currently programmed parameter without saving the changes or goes to the higher level in the menu

– scrolls up the menu or left (horizontal menu)

– scrolls down the menu or right (horizontal menu)

enter – allows to enter the selected option and approve the set value

5 Player state after turning on the device

When PX249 is turned on, the start menu appears on the screen. The menu design varies depending on whether the device is receiving the DMX signal or not. Direct keyboard support (played track control) is possible when the DMX signal is not being received.



The start menu screen if no DMX signal is received



The start menu screen if the DMX signal is received

Selecting the ***Menu*** and confirming the selection with the *enter* key will enter the menu, where you can select the playlist to be played, audio settings, DMX address, change additional options and check the information about the firmware.

If no DMX signal is received, you can change the playback settings directly on the initial menu. To do so, you need to select the icon:

 play
 pause
 stop
 rewind
 forward

and then confirm your selection by pressing *enter*.

Similarly, you can change the volume level, playback mode and track number. To do this, use the following keys: and .

6 Audio formats, memory cards and files naming

The Audio DMX Player supports audio files in the **.wav* format with the following parameters only:

- **.wav* files with bits per sample value 16-bit on two-channels
- acceptable sampling frequencies:
  - 8 kHz
  - 16 kHz
  - 22,05 kHz
  - 32 kHz
  - 44,1 kHz
  - 48 kHz

NOTE! The player supports only SD or SDHC cards formatted in the FAT32 file system. There must be no more than 255 files on the memory card in the root folder. In addition, in each of the eight playlists (files in the root directory are treated as a *root* playlist) also can not be placed more than 255 files in each of them. A higher number of tracks or additional directories can result in the module's malfunctions when changing tracks.

Playlists 1 through 8 are in the folders on the SD / SDHC memory card with the following names: *p01 … p08*. The ninth playlist is the *root* playlist, which is the main directory of the memory card.

Tracks on the SD card should be named according to the following principle:

xxx_ABCD...O.wav

where:

xxx – numbers from 001 up to 255

ABCD...O – the name of the song containing up to 15 alphanumeric characters displayed on the main screen

**.wav* – wav file extension

Example:

001_Music.wav

002_Mozart.wav

003_Beethoven.wav

…

255_Chopin.wav

NOTE! For example, the number 010_Sound.wav corresponds to track number 10.

NOTE! If the correct track naming or the maximum number of tracks are not followed, playback or track changing problems may occur.

7 Player menu

After going to the ***Menu*** tab, you can edit the following options:

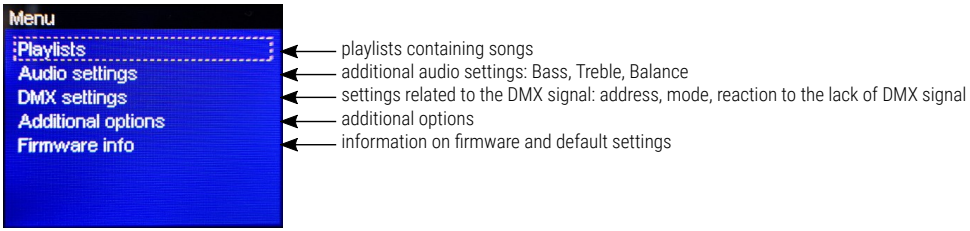

7.1 Playlists

The ***Playlists*** submenu allows to preview the list of songs in each playlist recorded on the SD / SDHC card and in the absence of DMX control to change the playlist or currently playing song.

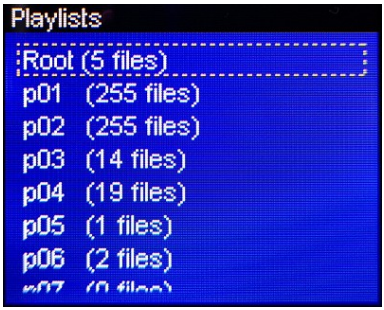

To change the playlist / song, select the appropriate playlist (*Root, p01 … p08*) and confirm the selection with the *enter* key.

After selecting the playlist, select the song you want to play currently, and then confirm your selection with the *enter* button.



NOTE! To change the playlist using DMX signal, in the ***DMX settings*** (7.3 DMX settings), change ***DMX mode*** to *5ch* or *8ch*, then 5 or 8 channel is responsible for changing the playlist number.

7.2 Audio settings

This submenu allows additional audio parameters to be changed. The user can modify the Bass, Treble and Balance settings. All parameters can be changed in the range from *-10* up to *+10*.

In order to make changes to these parameters, select a given setting, confirm your selection by pressing *enter*, and then use the ↖ or ↘ keys to change the value as needed. Return to the previous screen by pressing *escape* or *enter*.

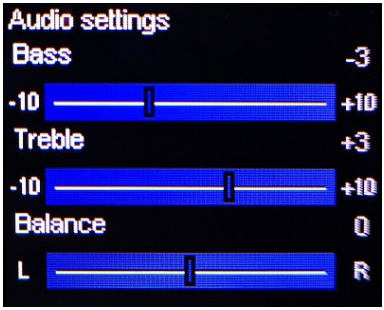

NOTE! In order to change the ***Bass*** and ***Treble*** settings, activate the ***Equalizer*** function in the ***Additional options*** (7.4 Additional options) menu.

7.3 DMX settings

Selecting a bookmark ***DMX settings*** allows to change the settings related to operation in the DMX mode.

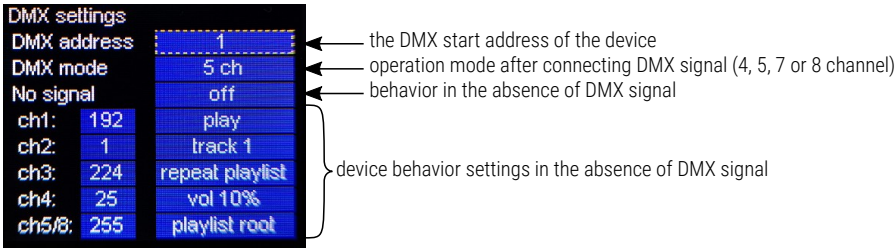

The DMX start address can be set in the range from 1 to 505 / 506 / 508 / 509. The range depends on the setting of the ***DMX mode***, this is because the device automatically takes up subsequent addresses after the starting address. For example, if the *4ch* (it occupies 4 consecutive channels) and the DMX start address is set to 509, the first device channel will be occupied by the DMX channel number 509 and the last 512 channel.

In the ***No signal*** mode, you can set the following:

- ***off*** – the playback stops after the DMX signal disappears,
- ***run*** – the player automatically starts working according to the parameters set in the ***No signal*** mode:
  - ***ch1*** – play, stop, pause
  - ***ch2*** – the number of the song being played (1 – 85 or 1 – 255, depending on whether the ***More tracks (255)*** option in the ***Additional options*** 7.4 Additional options is active or not)
  - ***ch3*** – operating mode (***single track, repeat track, single playlist, repeat playlist, single random, repeat random, random all once, random all loop***)
  - ***ch4*** – volume (range 0 – 100%)
  - ***ch5/8*** – playlist to be played (value 0 and 9 – 255 match the *root* playlist, values from 1 to 8 correspond to the following playlist numbers *p01 … p08*)
- ***last*** – the player continues its previously work (maintaining the last vale of the DMX signal),
- ***ext1*** – starts a track using an external button in accordance with the parameters defined in ***No signal*** (applies only to: *ch2*, *ch3*, *ch4*, *ch5/8* – *ch1* is not taken into account, it is always treated as *play*), each successive press of the external button will replay the defined track,

- *ext2* – starts a track using an external button in accordance with the parameters defined in *No signal* (*applies only to: ch2, ch3, ch4, ch5/8 – ch1 is not taken into account, it is always treated as play*), each subsequent pressing of an external key during the song will not cause any reaction, the song will be played back to the end, looped, the whole playlist or playlist will be played all the time in the loop (depending on the *ch3* settings).

7.4 Additional options

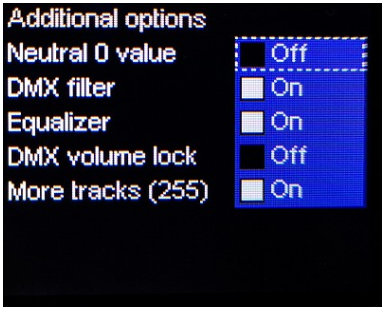

- *Neutral 0 value* – you can change the way a DMX value of 0 is interpreted. By default, a value of zero for each channel changes the way the device works (e.g. for channel 1 it stops playback), but after confirming *On* for the *Neutral 0 value* field, a value of zero is treated as neutral.
- *DMX filter* – filtration of short-term changes in the DMX signal. The player will react to the value if it remains unchanged for at least 5 DMX frames.
- *Equalizer* – switching on the equalizer allows to change the tone in the *Audio settings* menu. Turning off increases the volume.
- *DMX volume lock* – when the DMX is used for control, the volume level is locked at a value set using the keyboard. After restarting the device, it takes the value from the *DMX settings* menu.

- *More tracks (255)* – activating this function allows to handle up to 255 tracks on one playlist, by default this option is off (support for up to 85 tracks on one playlist). After turning this function on or off, the device must be restarted.

7.5 Firmware info / default settings

The submenu ***Firmware info*** includes the following information:

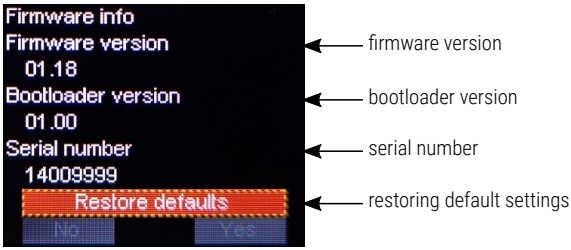

To restore the default settings in the device, confirm the highlighted on-screen ***Restore defaults*** button and select the ***Yes*** button visible on the screen. Confirm with *enter*.

NOTE! Please note that if the default settings are restored, all the previous configuration settings on the device will be lost.

Default settings:

- *DMX address*: *1*
- *DMX mode*: *4ch*
- *No signal*: *off*
- *ch1*: *192 (play)*
- *ch2*: *2 (track 1)*
- *ch3*: *224 (repeat playlist)*
- *ch4*: *25 (vol 10%)*
- *ch5/8*: *255 (playlist root)*
- *Bass*: *0*
- *Treble*: *0*
- *Balance*: *0*
- *Neutral 0 value*: *off*
- *DMX filter*: *on*
- *Equalizer*: *off*
- *DMX volume lock*: *off*
- *More tracks (255)*: *off*

8 Firmware update

The PX249 firmware update procedure is as follows:

1. Prepare an empty SD card (FAT32 file system)
2. Upload only the update file to the card (extension **.upg*)
3. Disconnect the Audio DMX Player from the mains
4. Remove the existing SD card and insert a new one that is updated
5. Reconnect the updated device to the mains

The update procedure is automatic. After the end of the process, the start menu will appear.

NOTE! After the update has been completed, remove the card with the update as otherwise it will update your device whenever it is powered up.

9 DMX-512 control

The device can be controlled via four, five, seven or eight channels

9.1 Control via 4 or 5 channels

Channel 1: stop / pause / resume / start

DMX values:

0 – 63 – ***stop***

64 – 127 – ***pause***

128 – 255 – resume / start ***play***

Channel 2: track number selection (***More tracks (255)*** off)

DMX value	0-3	4-6	7-9	10-12	13-15	16-18	19-21	22-24	25-27	28-30	31-33
Track number	001	002	003	004	005	006	007	008	009	010	011
DMX value	34-36	37-39	40-42	43-45	46-48	49-51	52-54	55-57	58-60	61-63	64-66
Track number	012	013	014	015	016	017	018	019	020	021	022
DMX value	67-69	70-72	73-75	76-78	79-81	82-84	85-87	88-90	91-93	94-96	97-99
Track number	023	024	025	026	027	028	029	030	031	032	033
DMX value	100-102	103-105	106-108	109-111	112-114	115-117	118-120	121-123	124-126	127-129	130-132
Track number	034	035	036	037	038	039	040	041	042	043	044
DMX value	133-135	136-138	139-141	142-144	145-147	148-150	151-153	154-156	157-159	160-162	163-165
Track number	045	046	047	048	049	050	051	052	053	054	055
DMX value	166-168	169-171	172-174	175-177	178-180	181-183	184-186	187-189	190-192	193-195	196-198
Track number	056	057	058	059	060	061	062	063	064	065	066
DMX value	199-201	202-204	205-207	208-210	211-213	214-216	217-219	220-222	223-225	226-228	229-231
Track number	067	068	069	070	071	072	073	074	075	076	077
DMX value	232-234	235-237	238-240	241-243	244-246	247-249	250-252	253-255			
Track number	078	079	080	081	082	083	084	085			

NOTE! When *More tracks (255)* is active, the value of the DMX signal corresponds to the number of the song.

Channel 3: playback mode – *single* (a selected track is played once), *single loop* (a selected track is played back repeatedly), *single continuous* (starting from a selected track, the playback runs one after the other, the playback is stopped after the last track), *continuous loop* (starting from a selected track, the playback runs in a specific order, the first track is played after the last one in the list), *single random* (randomly selected song played once), *single random in loop* (randomly selected song is played repeatedly), *single continuous random* (starting from a random track, the playback runs randomly, the playback is stopped after the last track), *continuous loop random* (starting from a random track, the playback runs randomly).

DMX values:

0 – 64 – single playback ***single track***

65 – 127 – single loop playback ***repeat track***

128 – 191 – single continuous playback ***single playlist***

192 – 251 – continuous loop playback ***repeat playlist***

252 – single random playback ***single random***

253 – single random playback in loop ***repeat random***

254 – single continuous random playback ***random all once***

255 – continuous loop random playback ***random all loop***

Channel 4: volume control

On the fourth DMX channel, the device supports volume control in the range from 0 up to 100%. The volume is changed linearly in accordance with the following schedule: for the DMX signal with a value of 0 the volume is 0%, while for the value of 255 the volume is 100%.

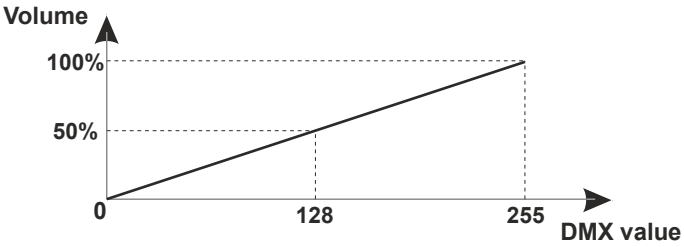

Channel 5: change of playlist (only available for 5-channel *5 ch* control mode)

DMX value	0	1	2	3	4	5	6	7	8	9 - 255
Playlist number	root	p01	p02	p03	p04	p05	p06	p07	p08	root

NOTE! In 4-channel mode, only files from the *root* playlist (root directory on the memory card) are played. Playback of 85 tracks (first 85 out of 255) and *4 ch* mode are set to the default.

9.2 Control via sever or eight channels

In the seven or eight DMX channels mode, in addition to the same settings on the first four channels (as for the four- and five-channel mode) PX249 can change parameters of ***Bass***, ***Treble*** and ***Balance*** on the fifth, sixth, and seventh channel.

All channels in this mode (*7 ch* and *8 ch*) are described below:

Channel 1: stop / pause / resume / start

Channel 2: selection of the song number in the range 1 – 85 or 1 – 255 (depending on the settings ***More tracks (255)***)

Channel 3: playback mode – single, single loop, single track list, looped track list, single random, single random loop, single random track list, looped random track list

Channel 4: volume control (0 – 100%)

NOTE! Channels from 1 to 4 are described in detail in section 9.1 Control via 4 or 5 channels.

Channel 5: bass control (in range from -10 to +10)

Channel 6: treble control (in range from -10 to +10)

Channel 7: balance control (L -10, -9 … 0 … +9, +10 R)

For each of the three additional channels (5, 6, 7), adjustment through DMX control is made for the same values. These values are shown in the table below.

DMX value	0-12	13-24	25-36	37-48	49-60	61-72	73-84	85-96	67-108	109-120	121-135
Adjustment value	-10	-9	-8	-7	-6	-5	-4	-3	-2	-1	0
DMX value	136-147	148-159	160-171	172-183	184-195	196-207	208-219	220-231	232-243	244-255	
Adjustment value	1	2	3	4	5	6	7	8	9	10	

Channel 8: change of the playlist (available only for 8-channel *8 ch* control, DMX values corresponding to a specific playlist are described in the ***channel 5*** table in point 9.1 Control via 4 or 5 channels)

NOTE! In 7-channel mode, only files from the *root* playlist (root directory on the memory card) are played.

10 Connection scheme

a) amplifier connection diagram (unbalanced output)

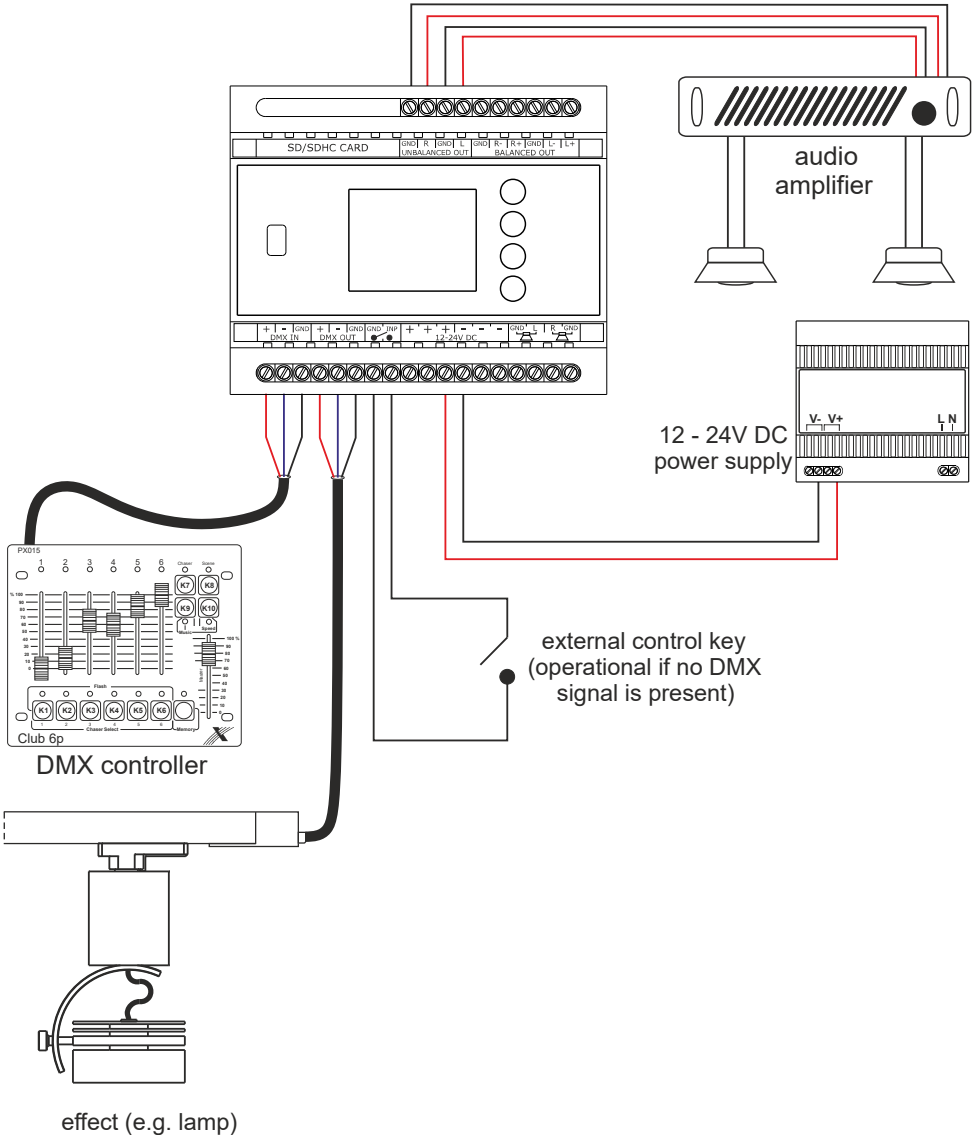

b) amplifier connection diagram (balanced output)

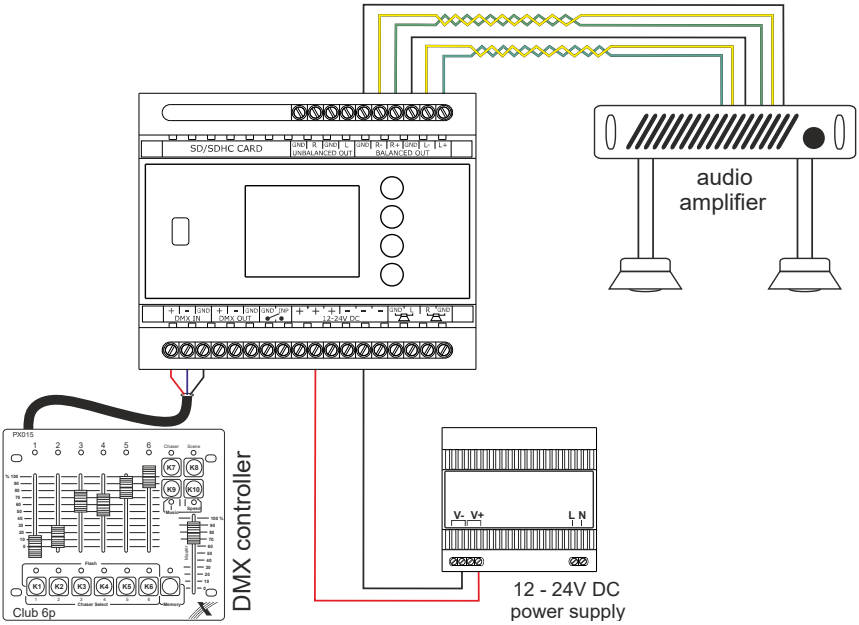

c) speakers connection diagram

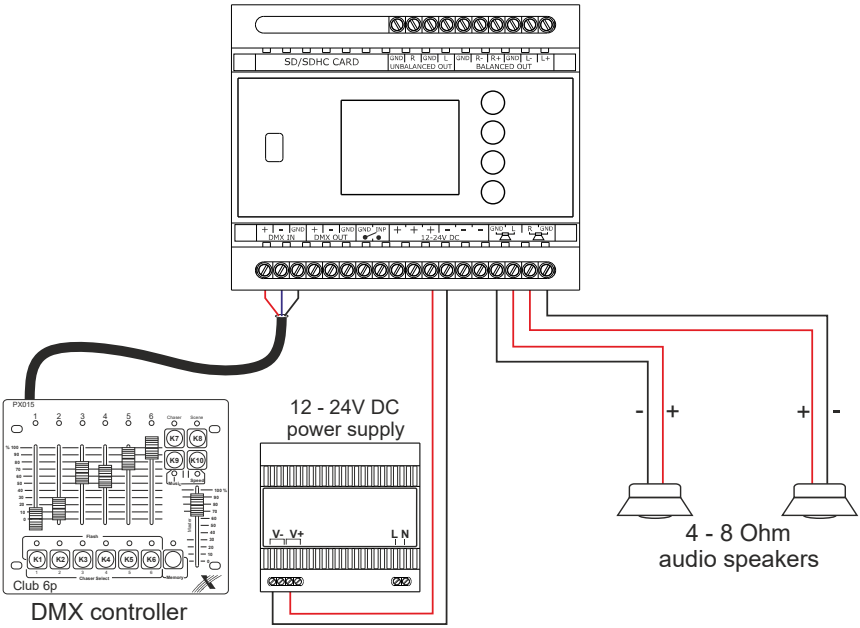

11 Dimensions

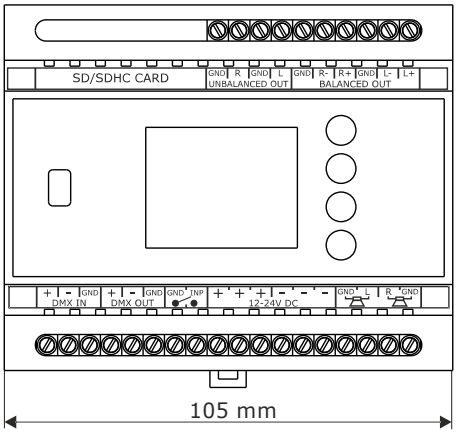

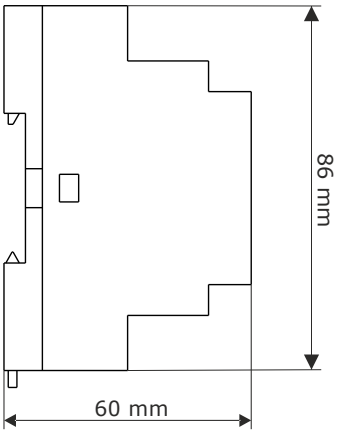

12 Technical data

type	PX249
power supply	12 – 24V DC
control	DMX-512
DMX channels	4, 5, 7 or 8
supported file formats	WAV (16 bit)
number of supported tracks	up to 2295* (in 9 playlists)
supported media storage	SD/SDHC card
power amplifier output degree	class D
amplifier power	2 x 12W (for 4 Ohms load and 24V DC)
amplification	20dB
transmitted frequency band	42Hz – 21kHz
sampling rate	8kHz, 16kHz, 22.05kHz, 32kHz, 44.1kHz, 48kHz
load impedance	4 or 8 Ohms
types of audio outputs	symmetrical, unsymmetrical and loudspeaker
color screen resolution	128 x 160px (1,8”)
total power consumption	max. 1,3A (for 24V DC)
power consumption	max. 32W
weight	0.2kg
dimensions	width: 105mm (6 DIN rail modules) height: 86mm depth: 60mm

* - from the firmware version 1.18

Podłęże, 29.10.2021

DECLARATION OF CONFORMITY

PXM Marek Żupnik spółka komandytowa
Podłęże 654, 32-003 Podłęże

we declare that our product:

Product name:	Audio DMX Player
Product code:	PX249

meets the requirements of the following standards, as well as harmonised standards:

PN-EN IEC 63000:2019-01	EN IEC 63000:2018
PN-EN 61000-4-2:2011	EN 61000-4-2:2009
PN-EN IEC 61000-6-1:2019-03	EN IEC 61000-6-1:2019
PN-EN IEC 61000-6-3:2021-08	EN IEC 61000-6-3:2021

And meets the essential requirements of the following directives:

2011/65/UE DIRECTIVE OF THE EUROPEAN PARLIAMENT AND OF THE COUNCIL of 8 June 2011 on the restriction of the use of certain hazardous substances in electrical and electronic equipment Text with EEA relevance.

2014/30/UE DIRECTIVE OF THE EUROPEAN PARLIAMENT AND OF THE COUNCIL of 26 February 2014 on the harmonisation of the laws of the Member States relating to electromagnetic compatibility (recast) Text with EEA relevance.

PXM
Marek Żupnik spółka komandytowa
32-003 Podłęże, Podłęże 654
NIP 677-002-54-53



mgr inż. Marek Żupnik.