PX257-OC

PX257-RE

DMX/Relay Interface 8ch

User manual

Table of Contents

1 Description....3
2 Safety condition....4
3 Connectors and control elements....5
4 Device programming....7
4.1 Button features....7
4.2 DMX channel value for the output turning on and off....7
4.3 DMX address....8
4.4 Reaction of the device to DMX signal interruption....9
4.5 Complementary outputs....12
4.6 Hysteresis thresholds....15
4.7 Default settings and memory errors....16
5 DMX signal connection....18
6 Programming scheme....19
7 Connection scheme....21
8 Dimension....25
9 Technical data....26

Manufacturer reserves the right to make modifications in order to improve device operation.

PXM sp. z o.o.
Podłęże 654
32-003 Podłęże
BDO register number000005972

tel. +48 12 385 83 06
mail: info@pxm.pl
www.pxm.pl

Rev.2-0
09.09.2026

1 Description

PX257 is a device made in two versions: **8 Relay Module** and **Switch 8x1.3A OC**. It is used for switching on and off stage lighting and theatrical effects as well as architectural lighting equipment using the DMX-512 signal. The module incorporates a set of 8 relays that control on / off outputs.

The PX257 OC version is an 8-channel digital DC switch, featuring maximum single circuit switching load of 1.3A.

The device menu allows the user to program DMX addresses for all the output channels and to set characteristics for the purpose of controlling electric motors.

In both versions of the device is designed for mounting on standard DIN rails in electrical switchgear.

NOTE! The following instruction is valid for devices from serial number 21250049.

2 Safety condition

The PX257 is a device powered with safe voltage 12 – 24V DC; however, during its installation and use the following rules must be strictly observed:

1. The device may only be connected to the 12 – 24V DC power supply (stabilized voltage) with current-carrying capacity compatible with technical data.
2. All conductors should be protected against any mechanical and thermal damage.
3. In case of any wire damaging, it should be replaced with one of the same parameters.
4. Connection of DMX signal should be made only shielded conductor.
5. All repairs or wire connection can only be made with power supply disconnected.
6. In case of connecting output relays to 230V mains You should be double cautious because of the risk of getting electrocuted (applies to PX257-RE).
7. PX257 should be strictly protected against contact with water and other liquids.
8. The device cannot be turned on in places with humidity exceeding 90%.
9. The device cannot be used in places with temperature lower than +2°C or higher than +40°C.
10. For cleaning use only a damp cloth.

3 Connectors and control elements

a) “Relay” version of PX257

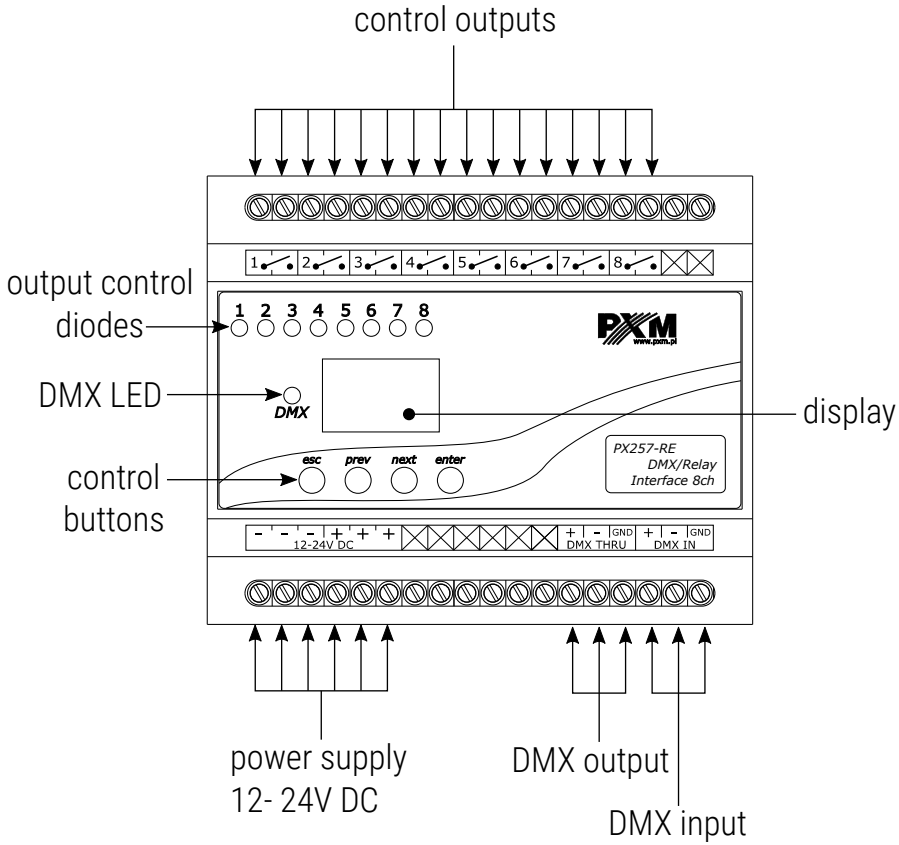

b) "OC" version of PX257

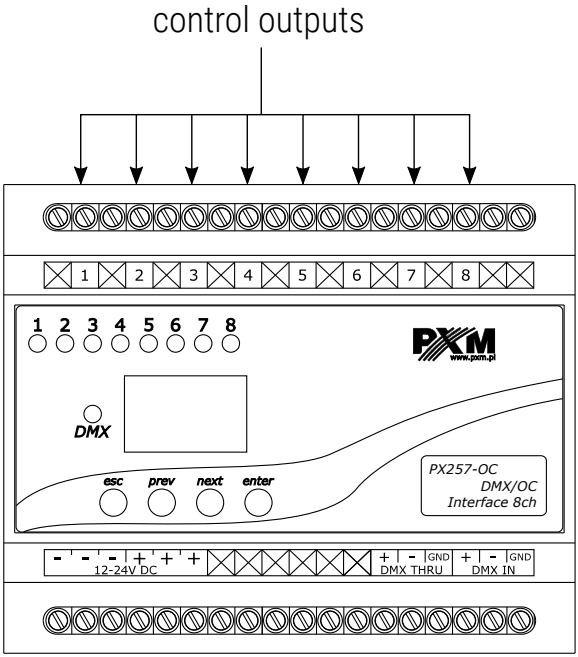

4 Device programming

After you switch on the module, its display shows the program version for a brief moment. To access the main menu, press "*enter*", and the display will show *Adr*. Press "prev" or "*next*" to select the appropriate menu and press "*enter*" to confirm your selection.

4.1 Button features

esc – goes back to the previous MENU level or discards changes made

prev – scrolls to the previous feature on the same MENU level or decreases the parameter's value

next – scrolls to the next feature on the same MENU level or increases the parameter's value

enter – enters the next MENU level and confirms changes made

4.2 DMX channel value for the output turning on and off

The output will be switched on once the DMX channel is set to values over the upper hysteresis threshold. On the other hand, the output will be switched off after the DMX channel is set to values below the lower hysteresis threshold.

4.3 DMX address

The PX257 menu allows the user to set a DMX address on a group basis *ALL* in the 1 – 512 range. It is possible to set an address individually *Ind* for one of the eight outputs (*Ad1* – *Ad8*).

ON A GROUP BASIS

Using the "*next*" or "*prev*" keys, set the desired DMX address by selecting values from 1 to 512 and press "*enter*". The address thus set will be assigned to the first channel, subsequent DMX addresses will be assigned to subsequent channels. For example, if the value is set on 100, it means that first channel will have an address DMX 100, second 101 … eight 107.

Once an address is programmed in this manner, the individual settings for each channel are canceled.

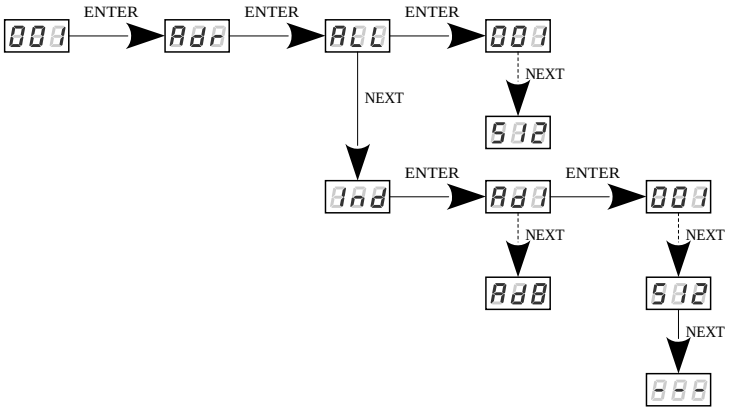

ON AN INDIVIDUAL BASIS

Using this menu you can set a DMX address individually for the 8 outputs. After you select ***Ind*** in the main menu, press "***enter***" to confirm your selection. Using the "***prev***" or "***next***" keys, select the output you want to configure (***Ad1*** – ***Ad8***) and press "***enter***".

Using the "***prev***" or "***next***" keys, select a value from the range 1 – 512, or [888] to turn off the output completely, and press "***enter***".

4.4 Reaction of the device to DMX signal interruption

In the [bOS] you can configure the response of the device to DMX signal interruptions. Available options include:

Pr1, ***Pr2***, ***Pr3***, ***Pr4*** – 4 built-in programs

Sc – a scene that can be programmed

on – switching on of all the outputs

oFF – switching off of all the outputs

hld – holding the last value

PROGRAM

In order to configure a program, access the PROG menu by pressing "***enter***" and select the desired program with "***next***" or "***prev***" keys, and finally press "***enter***" to confirm your selection.

Program number	Action
First program – *Pr1*	all the outputs and diodes are switched on, and blink, simultaneously
Second program – *Pr2*	outputs and LEDs blink alternately in two groups, the first group being outputs 1 – 4, and the other – outputs 5 – 8
Third program – *Pr3*	outputs and LEDs blink one after another: when one goes out another turns on, in the direction from output 1 to output 8
Fourth program – *Pr4*	outputs and LEDs blink one after another: when one goes out another turns on, in the direction from output 8 to output 1

Spd – this option allows the user to adjust program speed within the range of 0.1 – 60 seconds.

Sc – allows you to select a static scene, what means to activate selected outputs.

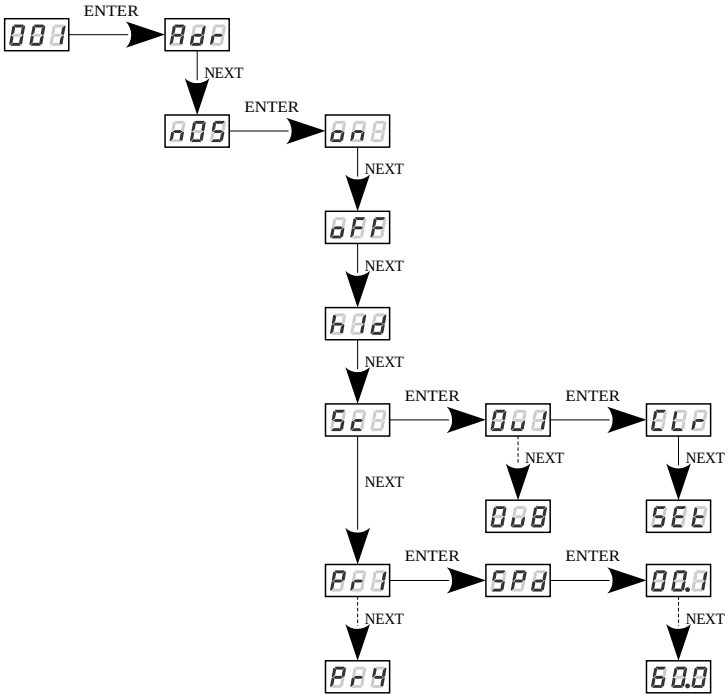

4.5 Complementary outputs

The PX257 switch can operate in a complementary output mode. This feature is utilized e.g. for controlling electric motors. (change the direction of rotation).

In the *Cpl* menu you can select:

oFF – the complementary mode is switched off

on1 – 4 pairs outputs – one of them is always turned on – 4 DMX channels

on2 – 4 pairs outputs – enabled is the output that was started first

In mode *on1*, the outputs operate in pairs, whereby one of the outputs is switched on, and the other is switched off. The complementary pairs constitute outputs 1 – 2, 3 – 4, 5 – 6 and 7 – 8. In this mode, control is performed by means of 4 DMX channels. In *Cpl* menu in *on1* mode after press "*enter*" button its possible to change the time between disable one of output in pair and enable the second output in pair (in this time both outputs are disabled). Using the buttons "*next*" or "*prev*" it can be changed time delay in the range of 0.1 – 5s.

When control is performed using the DMX signal, the device operates in the following way:

Input DMX channels	1		2		3		4	
Outputs number	1 – 2		3 – 4		5 – 6		7 – 8	
DMX signal value > upper then hysteresis threshold	on	off	on	off	on	off	on	off
DMX signal value > lower then hysteresis threshold	off	on	off	on	off	on	off	on

In case of lack of DMX control device operates with according the ***No Signal DMX*** nos mode: An example nos in ***on*** mode:

Outputs number	1 – 2		3 – 4		5 – 6		7 – 8	
No signal ON	on	off	on	off	on	off	on	off
No signal OFF	off	on	off	on	off	on	off	on

Where:

on – the output is enabled

off – the output is disabled

Mode ***on2***: outputs are paired, each DMX channel controls one output, but the outputs are never enabled simultaneously. If both channels are enabled, the output that is switched on is the one whose DMX channel was first to be enabled. The same as in ***on1*** mode its possible to change the time between disable one of output in pair and enable the second output in pair.

By way of example:

The action of switching on the first DMX channel will cause the first output to be switched on. The action of switching on the second channel (with the first channel still being on) will not switch on output 2. This output 2 can only be switched on after the first channel (of the enabled channel pair 1 – 2) is switched off (after a pre-set time).

If both DMX channels are switched off, none of the outputs are switched on.

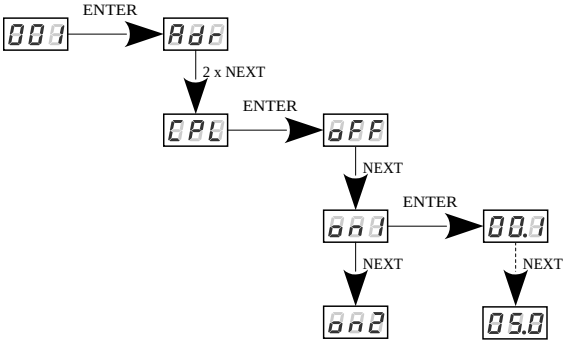

An example of connecting an electric motor with two directions of rotation to device PX257

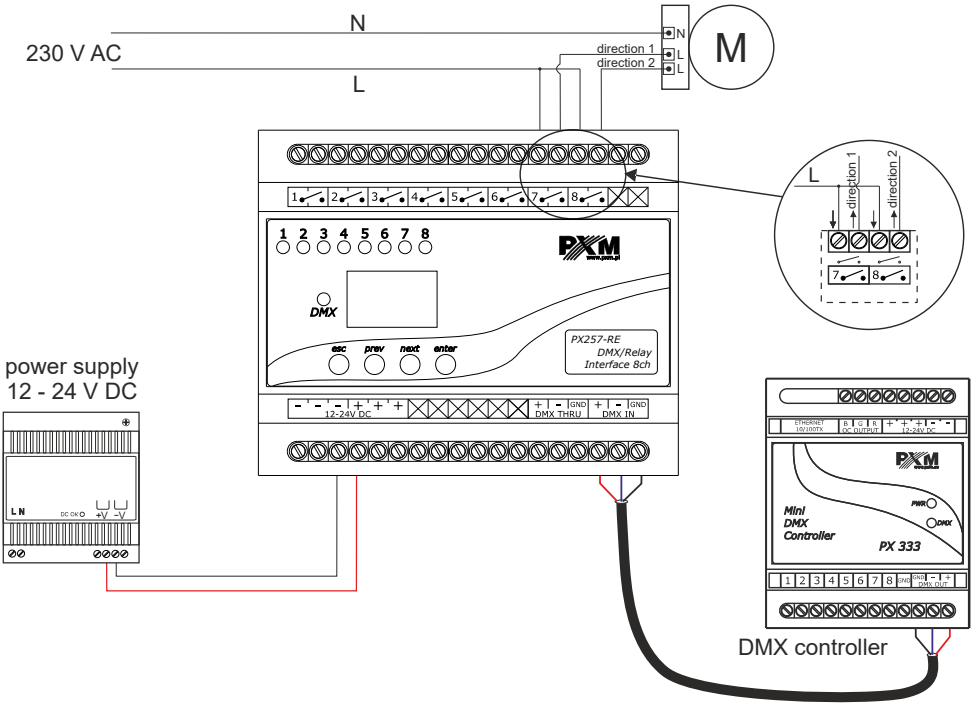

NOTE! If you want to connect an electric motor to the device, it has to be connected to paired outputs (e.g. output 1 – 2 / OUT1 – OUT2). If connected to unpaired outputs, may damage the motor or device PX257.

4.6 Hysteresis thresholds

The device can employ hysteresis which prevents relay contact vibration during switching on and off. Two hysteresis thresholds are applied, one for switching to the *On* position, the other – to the *OFF* position. If the *OFF* hysteresis threshold is below the *On*, a normal characteristic is obtained. If the *OFF* hysteresis threshold is above the *On*, a reversed control characteristic is obtained. If the thresholds are identical, the channel will be switched on at all times.

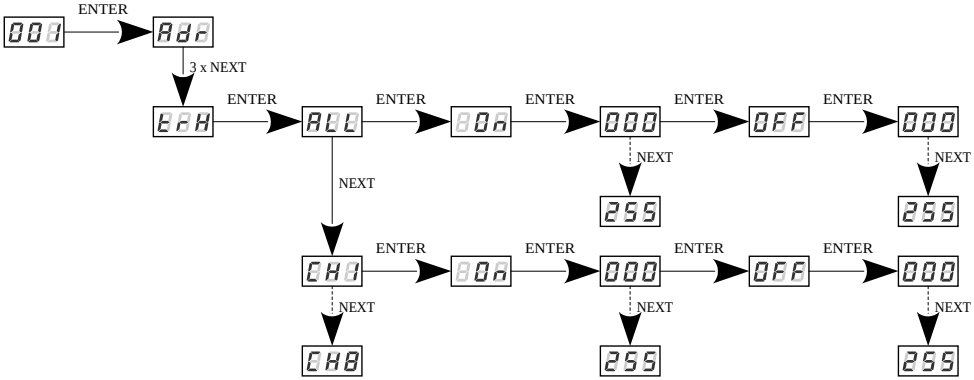

ALL – setting an *On* and *OFF* hysteresis threshold for all the eight channels at the same time (in the range of 0 – 255)

Ch1 – Ch8 – setting an *On* and *OFF* hysteresis threshold for individual channels

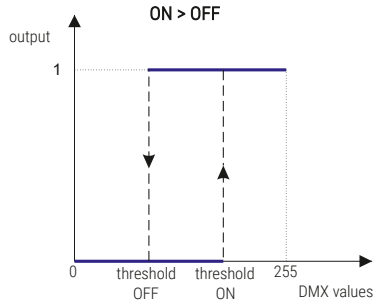

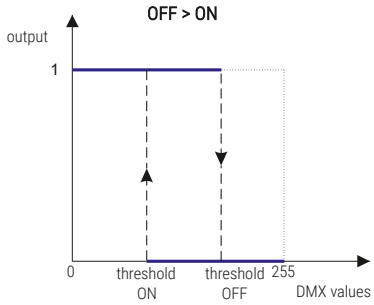

4.7 Default settings and memory errors

If you have any difficulty accessing the device menu, e.g. it is not possible to enter a particular menu level or it is necessary to restore the device to its default settings, follow the instructions below.

In the first case, when a particular menu level cannot be accessed or menu items are displayed incorrectly, this may indicate that a saving-in-memory error has occurred. In such a case, try to restore the device to its default settings before sending the PX257 to the service center. If, after restoring to its default settings, the device still does not operate correctly, please send it to our service center.

To restore the device to its default settings, press and hold the "***prev***" key while switching on the device. One of the messages that will be displayed will say ***dFl***, which means successful restoring to default settings (the "***prev***" key has to be held down while powering on the device, until the ***dFl*** message is displayed).

If this message is accepted by pressing "***enter***", the default settings will be restored. The user can also exit this menu level without restoring the default settings. In order to do this, press the "***esc***" key.

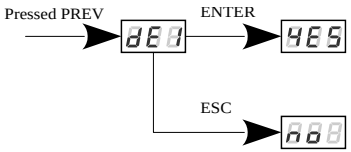

You can also restore the default settings from the menu level by carrying out the following steps:

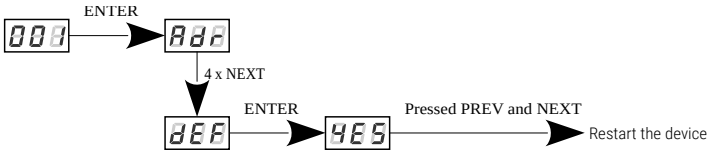

When the *YES* message appears on the display, press and hold down the keys "*prev*" and "*next*" simultaneously until the device resets itself and the start menu is displayed.

Please note that after restoring to default settings, all the operating parameters of the device will revert to the following ones:

- DMX address: 1
- complementary outputs: off
- no signal operating mode: off
- hysteresis thresholds: ON = 141, OFF = 115

The device incorporates an embedded memory controller. If the device experiences memory issues, the display will show an *Err* message – a memory error.

In such a case, press "*enter*" and the device will load its default configuration into the memory. If despite those steps the device continues to display the *Err* message, this means that the memory is permanently damaged and should be sent to the service center.

5 DMX signal connection

PX257 have to be connected to DMX line in serial mode, with no branches on DMX control cable. That means that DMX line, from the signal source, must be connected to ***DMX IN*** pins of PX257 and later, directly from ***DMX THRU*** pins to the next device in DMX chain.

If the PX257 is the last DMX chain receiver there should be terminator (resistor 120 Ohm) mounted between "***DMX+***" and "***DMX-***" pins of ***DMX THRU*** section.

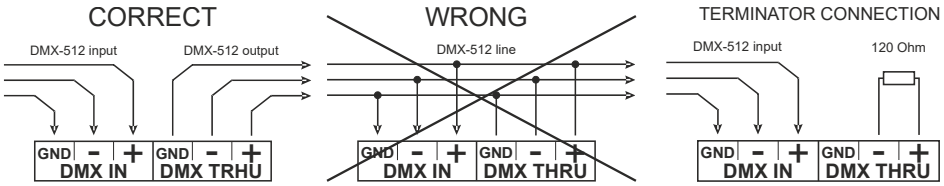

6 Programming scheme

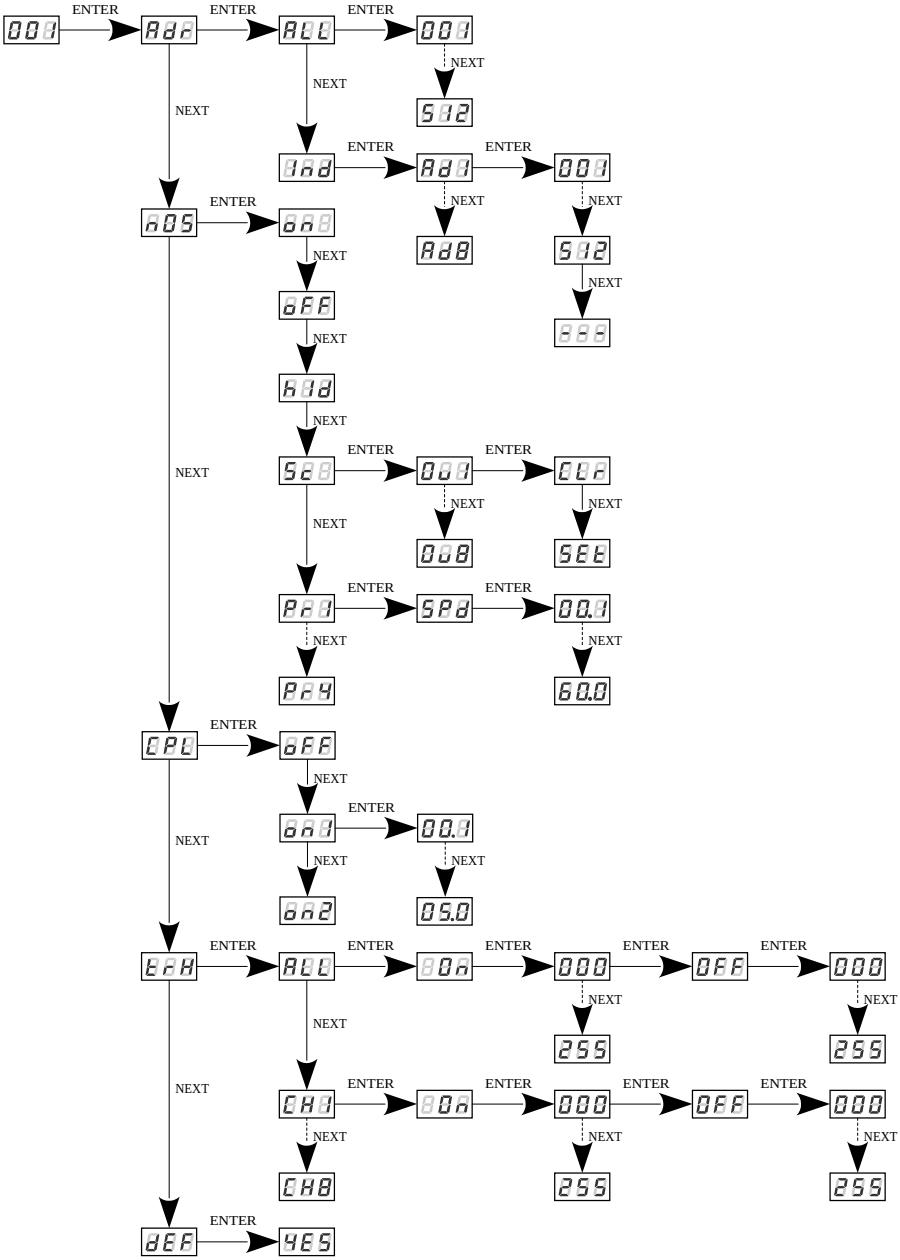

7 Connection scheme

a) version PX257–OC

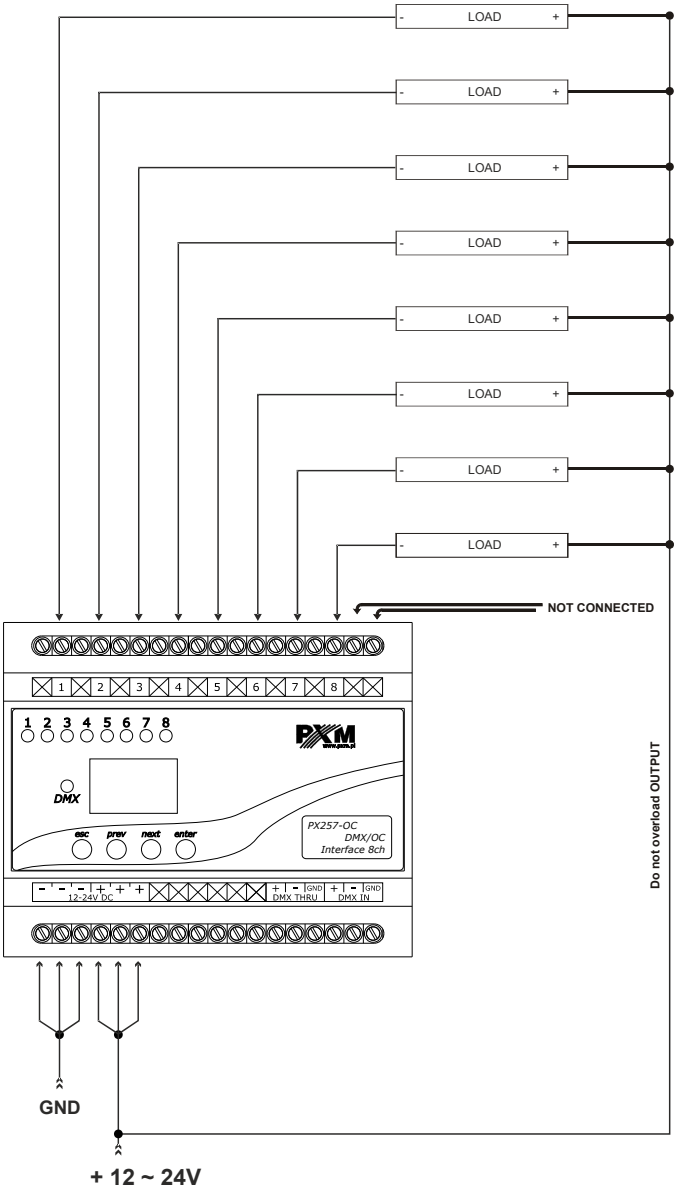

Each output in PX257 is an open collector, its inner construction is shown on picture below.

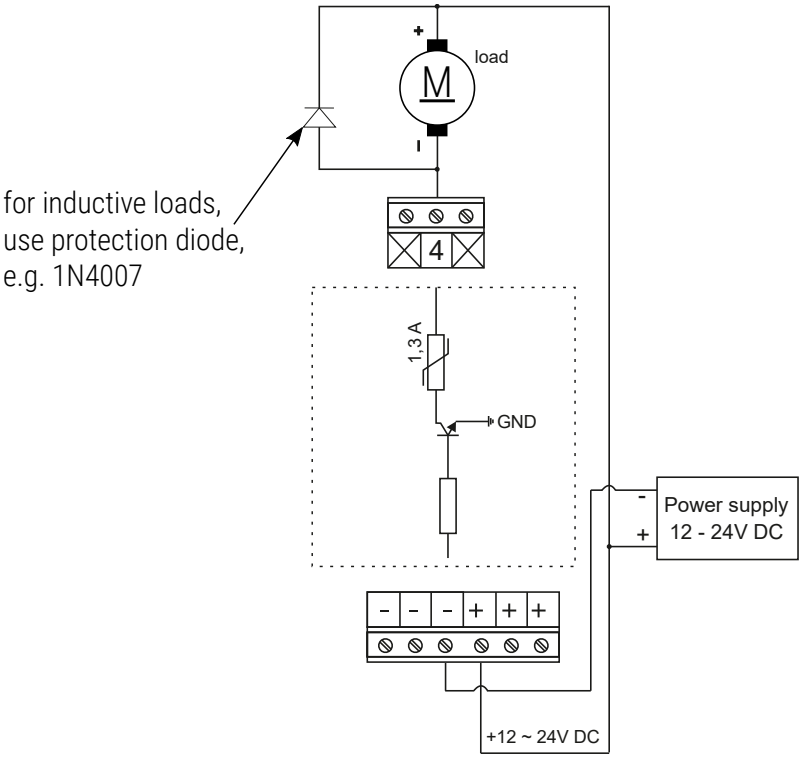

Inside the device at each outputs is protective thermistor PTC 1.3A, which one in case of breakdown (short circuit, overload), during the increase of resistance the temperature will rise the thermistor will disconnect.

These fuses are reusable, if the temperature returns to normal (the failure will be removed), the device will continue to work without having to replace the thermistor.

b) version PX257–RE – with low load

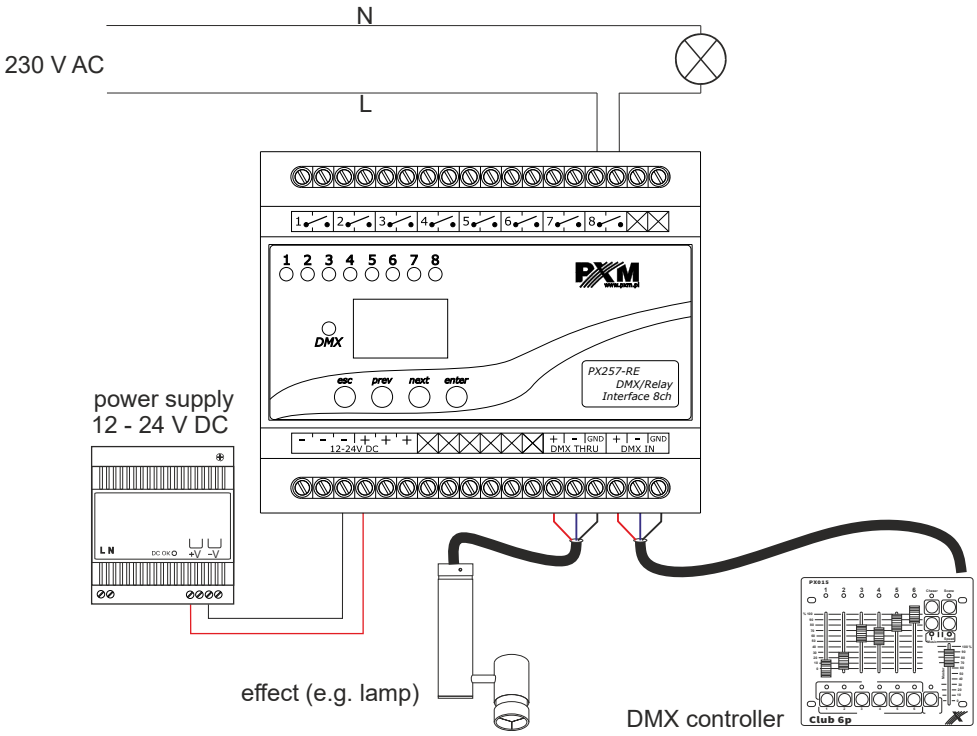

c) version PX257–RE – at high load, use a contractor with connected external power supply to receivers

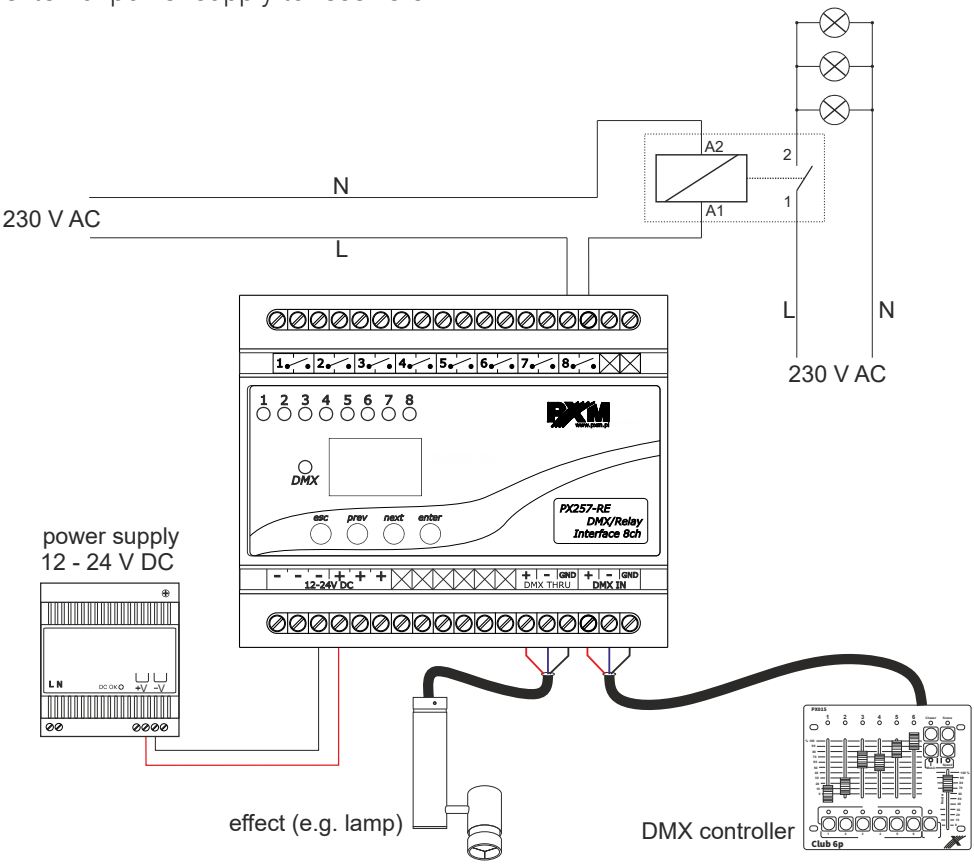

8 Dimension

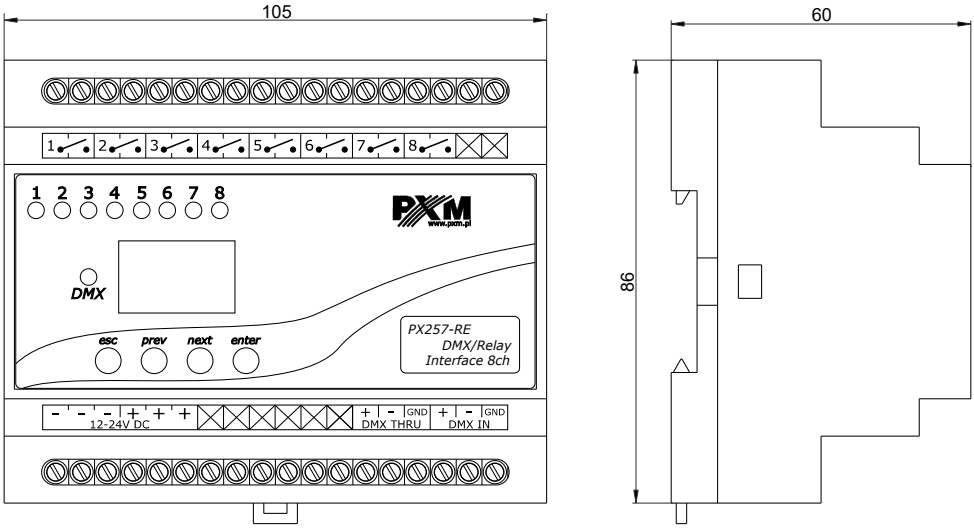
105
60
86
1 2 3 4 5 6 7 8
DMX
esc
prev
next
enter
PX257-RE
DMX/Relay
Interface 8ch
12-24V DC
DMX THRU
DMX IN
GND
GND

9 Technical data

type	PX257
number of DMX channels	512
power supply	12 – 24V DC
power consumption OC	max. 1W
power consumption RE	max. 4W
number of output channels	8
outputs load capacity (version RE):	
- resistive load	max. 2A, 250V AC / channel
- resistive load	max. 2A, 24V DC / channel
- inductive load	max. 0.5A, 250V AC / channel
- inductive load	max. 0.5A, 24V DC / channel
max. switching frequency (only version RE)	500 cycles/h (load rated AC)
outputs load capacity (version OC)	max 1.3A, 24V DC / channel
outputs sockets	screw terminals
input / through DMX	yes
weight	PX257-OC: 0.2kg PX257-RE: 0.3kg
dimensions	width: 105mm height: 60mm depth: 86mm

Podłęże, 08.09.2026

DECLARATION OF CONFORMITY

PXM sp. z o.o.
Podłęże 654, 32-003 Podłęże

we declare that our product:

Product name:	DMX/Relay Interface 8ch
Product code:	PX257-OC PX257-RE

meets the requirements of the following standards, as well as harmonised standards:

PN-EN IEC 63000:2019-01	EN IEC 63000:2018
PN-EN 61000-4-2:2011	EN 61000-4-2:2009
PN-EN IEC 61000-6-1:2019-03	EN IEC 61000-6-1:2019
PN-EN IEC 61000-6-3:2021-08	EN IEC 61000-6-3:2021

and meets the essential requirements of the following directives:

2011/65/UE DIRECTIVE OF THE EUROPEAN PARLIAMENT AND OF THE COUNCIL of 8 June 2011 on the restriction of the use of certain hazardous substances in electrical and electronic equipment Text with EEA relevance.

2014/30/UE DIRECTIVE OF THE EUROPEAN PARLIAMENT AND OF THE COUNCIL of 26 February 2014 on the harmonisation of the laws of the Member States relating to electromagnetic compatibility (recast) Text with EEA relevance.

PXM sp. z o.o.
32-003 Podłęże, Podłęże 654
NIP 677-002-54-53

mgr inż. Marek Żupnik.