PX370

PX370-L0

Driver LED C.V.

4 x 5A

User manual

Table of Contents

1 Description....4
2 Safety conditions....5
3 Connectors and control elements....6
4 Designation of displayed messages....6
5 Button features....8
6 Group DMX address settings....9
7 Individual DMX address settings....10
8 Color settings mode....11
9 No DMX signal response....14
9.1 Description of programs....16
10 Master / Slave function....18
11 White balance....19
12 Limiting the output power....20
13 Smooth....21
14 Selection of control curve....23
15 Light control frequency....24
16 Screen saving (screen blanking)....25
17 Default settings and device errors....25
17.1 Restore default settings....26
17.2 Error message....27
18 Display flip function....28
19 Device update....29
20 DMX signal connecting....30
21 RDM – available parameters....30
22 Programming....34
23 Connection scheme....35
24 Dimensions....37
25 Technical data....38

Manufacturer reserves the right to make modifications in order to improve device operation.

PXM Marek Żupnik sp.k.
Podłęże 654
32-003 Podłęże
BDO register number 000005972

tel. +48 12 385 83 06
mail: info@pxm.pl
www.pxm.pl

Rev.1-6
08.08.2022

1 Description

The PX370 driver is designed to control LEDs. Built-in DMX receiver allows for controlling 4 channels (R, G, B, W) directly with the DMX protocol. Wide range of power supply voltage and high current carrying capacity outputs permit a control of large quantities of LEDs.

PX370 can be either controlled by DMX, and act independently. In this case, the user is offered a fully programmable scene and 18 pre-programmed sequences, which can also freely change the playback speed and fluidity changes in steps.

Driver PX370 can operate in different control modes: ***2b*** – brightness and one of the 256 colors define by the manufacturer, ***3b*** – each color RGB can be set separately, ***3bd*** – each color RGB can be set separately and dimmer (dimming all outputs), ***4b*** – each color RGBW can be set separately, ***4bd*** – each color RGBW can be set separately and dimmer (dimming all outputs)***HSL*** – responsible for hue, saturation and lightness, ***dW*** – dynamic white (tunable white), control channels cold and warm white, ***EFF*** – it is available on 8 DMX channels and control R, G, B, W, Mode, Speed, Fade and Brightness.

The driver has a built-in tuning frequency signal system ("*flicker free*" technology), which makes it particularly useful in applications for the television industry. Since LEDs of RGB series often have different parameters, the driver can limit the maximum power of some output channels.

The PX370 is produced in *common anode* version – it allows LEDs connection on common anode.

2 Safety conditions

PX370 Driver LED C.V. 4 x 5A is a device powered with safe voltage 7 – 24V; however, during its installation and use the following rules must be strictly observed:

1. The device may only be connected to 7 – 24V DC with current-carrying capacity compatible with technical data.
2. All the conductors should be protected against mechanical and thermal damage.
3. In the event of damaging any conductor, it should be replaced with a conductor of the same technical data.
4. Connection of power supply can only be made with a conductor of minimum cross-section area of 2,5mm2 and DMX signal with shielded conductor.
5. All repairs and connections of outputs or DMX signal can only be made with cut off power supply.
6. PX370 should be strictly protected against contact with water and other liquids.
7. All sudden shocks, particularly dropping, should be avoided.
8. The device cannot be turned on in places with humidity exceeding 90%.
9. The device cannot be used in places with temperature lower than +2°C or higher than +40°C.
10. Clean with damp duster only.

3 Connectors and control elements

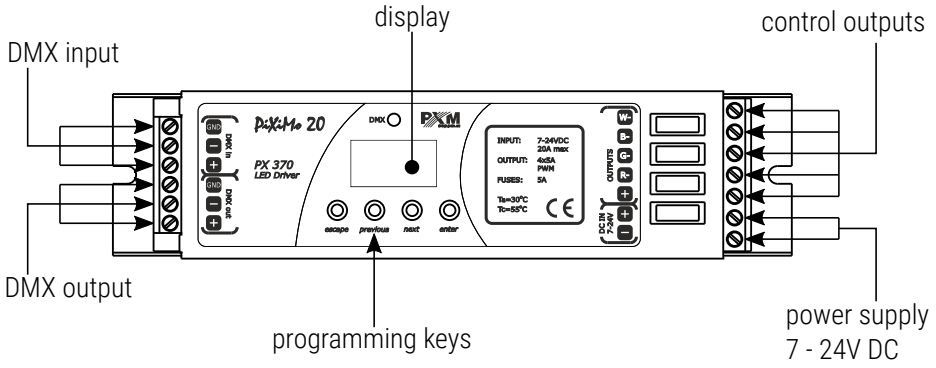

4 Designation of displayed messages

- 001 — DMX address of a device – a basic item in the MENU
- ALL — setting parameters for all channels simultaneously
- 1nd — setting parameters for each channel individually
- FLP — inverting the meter display 180 degrees
- Adr — DMX address setting
- Cbn — control method selection (RGBW, Lightness / Color, etc.)
- noS — no DMX signal response method selection
- Cnd — Master / Slave mode settings
- Cur — selection of the control curve
- Lin — setting the linear control curve
- dAL — setting the DALI control curve
- EP1 — setting the exponential control curve with exponent 2

 Lightness / Color control mode

 RGB control mode

 RGBW control mode

 RGB Dimmer control mode

 RGBW Dimmer control mode

 HSL control mode – Hue / Saturation / Lightness

 effect control mode

 dynamic white mode

 all outputs at 100%

 all outputs off

 scene

 program no. 17

 maintaining the last value before the disappearance of the DMX signal

 DMX address settings for first channel

 Master mode on / off

 number of channels being sent in the Master mode

 white color balance setting

 red balance

 green balance

 blue balance

 white balance

 white color balance on / off

 program playback speed

 level of steps change smoothness in the program

 red color during scene programming

 green color during scene programming

 blue color during scene programming

 white color during scene programming

 basic frequency of brightness control

 screen blanking

 memory error message

 restore default device settings menu

 restore default device settings menu

5 Button features

escape – goes back to the previous MENU level or discards changes made

previous – scrolls to the previous feature on the same MENU level or decreases the parameter's value

next – scrolls to the next feature on the same MENU level or increases the parameter's value

enter – enters the next MENU level and confirms changes made

6 Group DMX address settings

The menu of the PX370 driver allows for setting the DMX address within a range between 1 and 505 – 511 depending on work mode of device.
For example in RGBW mode it occupies four consecutive DMX addresses.
If start address is set to 509, the last channel is occupied by address 512.

<u>To set the DMX address:</u>

1. Set the ***Adr*** function.
2. Use the *next* or *previous* buttons to set the selected DMX address.
3. Push the *enter* button to confirm choose.

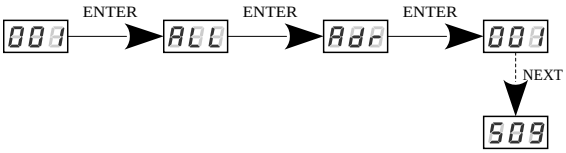

7 Individual DMX address settings

The PX370 module has an option that allows for changing individual settings. It enables assigning any DMX address to every output channel. The simplest example of implementation of this function is to control the lightness of one-color LEDs connected to all outputs. In such case, the same address must be assigned to all channels so that all outputs are controlled by one slider on the control panel.

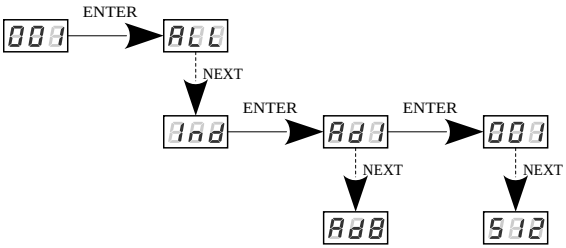

8 Color settings mode

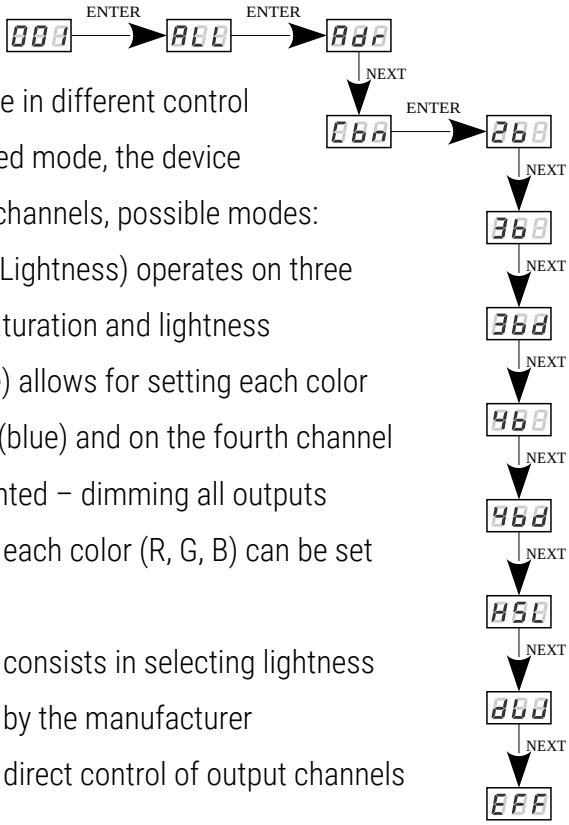

The PX370 driver can operate in different control modes. Depending on the selected mode, the device takes up a different numbers of channels, possible modes:

The *HSL* mode (Hue, Saturation, Lightness) operates on three channels, responsible for hue, saturation and lightness

The *3bd* mode (4-channel, 4-byte) allows for setting each color individually: R (red), G (green), B (blue) and on the fourth channel the Dimmer function is implemented – dimming all outputs

The *3b* mode (3-channel, 3-byte) each color (R, G, B) can be set separately

The *2b* mode (2-channel, 2-byte) consists in selecting lightness and one of the 256 colors define by the manufacturer

The *4b* mode (4-channel, 4-byte) direct control of output channels by means of the DMX channels

The *4bd* mode (4-byte plus dimmer) four DMX channels directly control the driver output channels, the fifth channel dims values on all the channels at the same time

The *dW* – dynamic white – control of 2 channel groups: cold white + warm white, by means of four DMX channels. The first DMX channel is responsible for color temperature of the first group, and the other channel – for lightness of the group. Similarly, the third and the fourth DMX channels control the other group.

The *EFF* mode – effects control – it is available on 8 DMX channels and allows to choose the right effect and parameters (description of the *EFF* mode is on the next page):

Channel 1 – red color
Channel 2 – green color
Channel 3 – blue color
Channel 4 – white color
Channel 5 – operating mode selection
Channel 6 – speed settings (higher value – quicker changes)
Channel 7 – fade settings (higher value – smoother transition)
Channel 8 – lightness settings (higher value – stronger glow)
sign "x" – possibility to control a given parameter of a selected mode
sign "-" – no possibility to control a given parameter of a selected mode

Description guide of *EFF* mode settings

CHANNEL 1 RED	CHANNEL 2 GREEN	CHANNEL 3 BLUE	CHANNEL 4 WHITE	CHANNEL 5 MODE	CHANNEL 6 SPEED	CHANNEL 7 FADE	CHANNEL 8 BRIGHTNESS
-	-	-	-	<0–7> Program 1	x	x	x
-	-	-	-	<8–15> Program 2	x	x	x
-	-	-	-	<16–23> Program 3	x	x	x
-	-	-	-	<24–31> Program 4	x	x	x
-	-	-	-	<32–39> Program 5	x	x	x
-	-	-	-	<40–47> Program 6	x	x	x
-	-	-	-	<48–55> Program 7	x	x	x
-	-	-	-	<56–63> Program 8	x	x	x
-	-	-	-	<64–71> Program 9	x	x	x
-	-	-	-	<72–79> Program 10	x	x	x
-	-	-	-	<80–87> Program 11	x	x	x
-	-	-	-	<88–95> Program 12	x	x	x
-	-	-	-	<96–103> Program 13	x	x	x
-	-	-	-	<104–111> Program 14	x	x	x
-	-	-	-	<112–119> Program 15	x	x	x
-	-	-	-	<120–127> Program 16	x	x	x
-	-	-	-	<128–135> Program 17	x	x	x
-	-	-	-	<136–143> Program 18	x	x	x
-	-	-	-	<144–151> OFF	-	-	-
x	x	x	x	<152–169> Strobo 10%	x	-	x
x	x	x	x	<170–199> Strobo 20%	x	-	x
x	x	x	x	<200–229> Strobo 50%	x	-	x
x	x	x	x	<230–255> RGBD	-	-	x

9 No DMX signal response

This function is used both to protect the installation against the DMX signal loss and to obtain control over LEDs without connecting an external controller. Once it is activated, if there is no DMX signal the module will realize a desired function independently. Reconnecting the DMX signal will automatically break the realized function and the module will once again follow the commands transmitted via the DMX line.

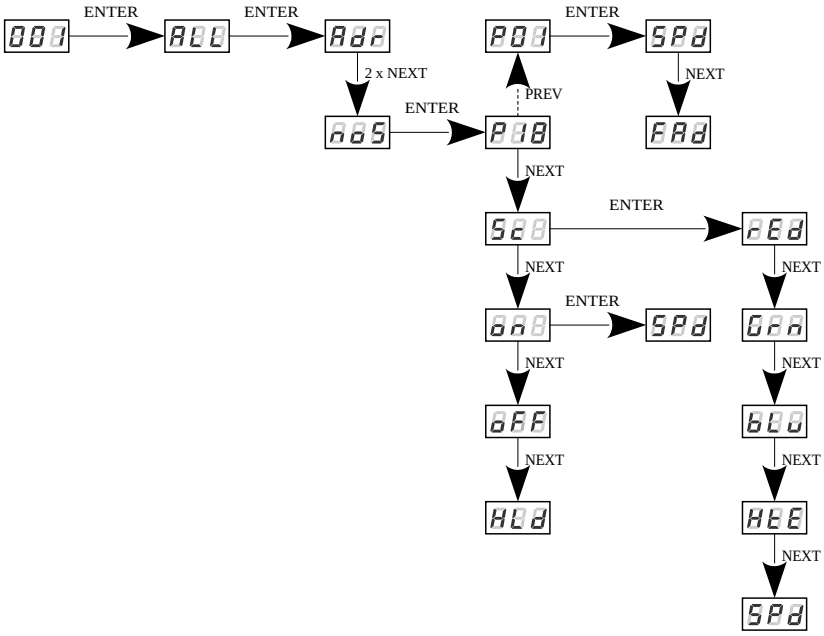

P01 – *P18* – choosing a ready program provided in the device software. For each program it is possible to set the speed (*SPd*) of the effects reproduction on range *0,1 – 99,9s* and smoothness of change of steps (*FAd*) in range *0 – 100*, where *0* is a step transition, and *100* completely smooth.
Sc –self-programmed scene in which it possible to set values for RGB colors (*rEd*, *Grn*, *bLu*, *HtE*) in range *0 – 255* for each color separately. Additionally can set the scene entry time (*SPd*) after decay DMX signal in range *0,1 – 99,9s*.
on – activation of all outputs at 100% with the possibility of setting the switch-on time (*SPd*) all outputs after decay DMX signal,
oFF – disabling all outputs after DMX signal loss,
HLd – maintaining the last value before the disappearance of the DMX signal.

9.1 Description of programs

The following tables show the values for each output channel (*R*, *G*, *B*, *W*) in programs from 1 up 18 (*P01* – *P18*). The value *255* corresponds to the maximum lightness level on a given channel, *127* – 50% of power level, *0* – full channel blanking.

		P01	P02	P03	P04	P05	P06	P07	P08	P09
Step 1	R	255	0	0	0	255	255	0	0	255
	G	0	0	0	0	0	0	255	255	0
	B	0	255	0	0	0	0	255	0	0
	W	0	0	255	0	255	0	0	0	255
Step 2	R	0	0	255	0	255	255	0	0	0
	G	255	255	0	0	255	0	255	255	0
	B	0	0	0	255	0	255	0	0	255
	W	0	0	0	0	0	0	255	0	0
Step 3	R	0	255	0	0	0	0	255		
	G	0	0	0	0	255	0	255		
	B	255	0	0	0	0	255	0		
	W	0	0	255	0	255	0	0		
Step 4	R			0	0	0	0			
	G			255	255	255	255			
	B			0	0	255	255			
	W			0	0	0	0			
Step 5	R			0	0	0	0			
	G			0	0	0	255			
	B			0	0	255	0			
	W			255	0	255	0			
Step 6	R			0	255	255	255			
	G			0	0	0	255			
	B			255	0	255	0			
	W			0	0	0	0			

		P10	P11	P12	P13	P14	P15	P16	P17	P18
Step 1	R	255	0	0	0	255	0	0	0	0
	G	0	0	0	0	0	255	0	127	0
	B	0	0	0	0	0	0	255	255	0
	W	0	0	0	0	127	127	127	0	0
Step 2	R	0	255	0	0	255	127	127	127	255
	G	0	0	255	0	127	255	0	255	255
	B	255	0	0	255	0	0	255	127	255
	W	0	0	0	0	0	0	0	0	255
Step 3	R					255	0	0	255	
	G					0	255	0	127	
	B					0	0	255	0	
	W					127	127	127	0	
Step 4	R					255	0	0	127	
	G					0	255	127	0	
	B					127	127	255	127	
	W					0	0	0	0	

10 Master / Slave function

The PX370 module has a built-in DMX-512 receiver and can be controlled from any desktop or controller running in this standard. Moreover, it is equipped with a programmable function of response to no DMX signal (*noS*). With 18 built-in default programs, it is possible to obtain interesting effects without an external controller. However, in larger installations, several PX370 drivers implementing the same program cannot provide a full playback synchronization. Therefore, PX370 has a Master feature. When it is activated, the module changes from a DMX receiver into a transmitter of this signal and sends programs to the other modules (which are set as Slave). If the Master function is active, this is indicated by a fast flashing of the DMX signaling diode.

With this solution, it is possible to make a precise synchronization even in very large installations without using an external controller.

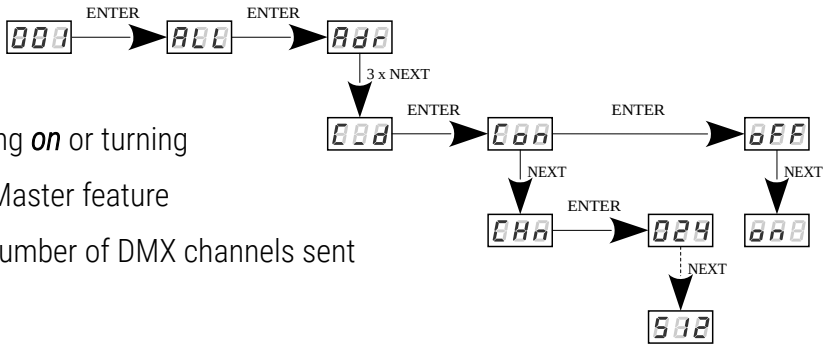

Con – turning *on* or turning *oFF* Master feature

Chn – the number of DMX channels sent

11 White balance

Sometimes, there can be problems with getting white color on the RGBW series LEDs. This may be a result of using diodes with different technical parameters. For this reason, the PX370 module is equipped with a white balance function. This option allows for choosing a correct color temperature for full activation of all 4 outputs (white color).

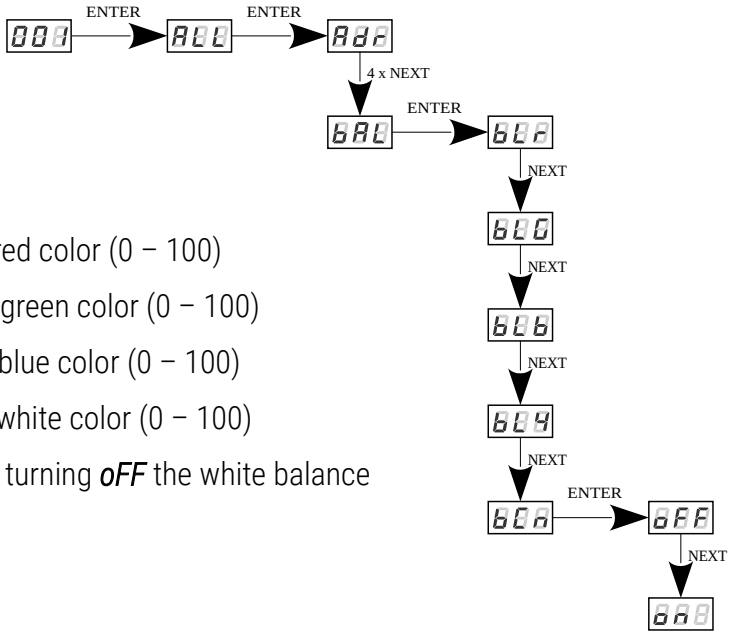

bLr – value for the red color (0 – 100)

bLG – value for the green color (0 – 100)

bLb – value for the blue color (0 – 100)

bLY – value for the white color (0 – 100)

bCn – turning *on* or turning *oFF* the white balance

12 Limiting the output power

The white balance parameter, apart from its original functionality, can also be used to limiting the output power of the driver. It works linearly and in a percentage way limits the output power of a given channel.

For example, if the ***bLr*** parameter is set on 50, it means that by the DMX control and no signal mode this value can not be exceeded. The control will only operate within the range 0 – 50% of the output value for this channel.

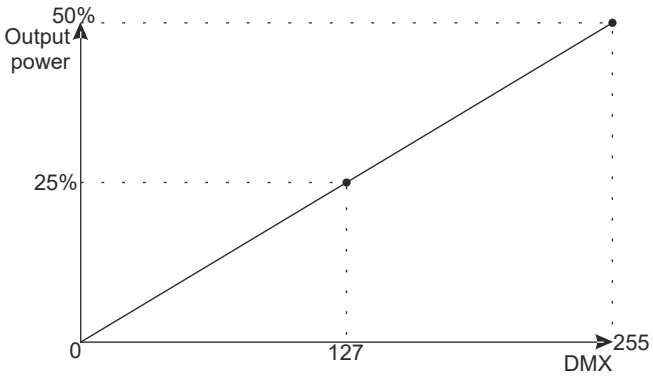

For the activate this function, the ***bCn*** parameter must be set to ***on***.

Available power limitation values:

bLr – the output power limitation value for the red channel (0 – 100)%

bLG – the output power limitation value for the green channel (0 – 100)%

bLb – the output power limitation value for the blue channel (0 – 100)%

bLY – the output power limitation value for the blue channel (0 – 100)%

bCn – turning ***on*** or turning ***oFF*** the limiting the power output

The menu diagram for Limiting the output power is analogous to that in chapter 11. White balance (previous page).

13 Smooth

The driver is equipped with a smooth option. Smooth feature allows for smooth changes in lightness and color. When it is set to On the transition between successive DMX values sent to the lamp (e.g. corresponding to changes in lightness) are smooth with no visible twitches, which prevents the common light “vibrations” effect. Two consecutive DMX values sent to the lamp are smoothed linearly between the DMX signal packets for the selected [P2P] option or the time interval set in the [tAn] menu in range 10 – 999ms.

The smooth function may slightly slow down the lamp's response rate to changes in the DMX signal; therefore, it is possible to disable this option. This can be done by checking the [dAS] parameter and confirming the selection by pressing *enter*.

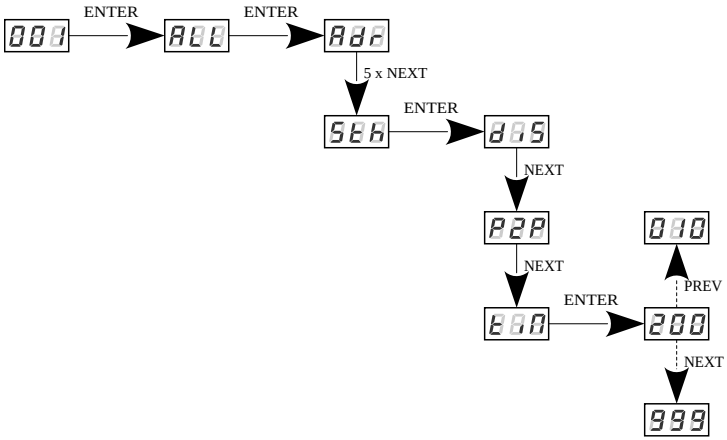

NOTE! In the *L0* version, the smoothing settings are presented below. Information whether the device is the *L0* version is displayed during device start-up.

By default, the ***Sth*** option is enabled at level **003**. The options are:

- **Off** – smoothing disabled,
- **001** – **004** – smoothing level adjustable from 1 to 4 (1 – fast, 4 – very smooth).

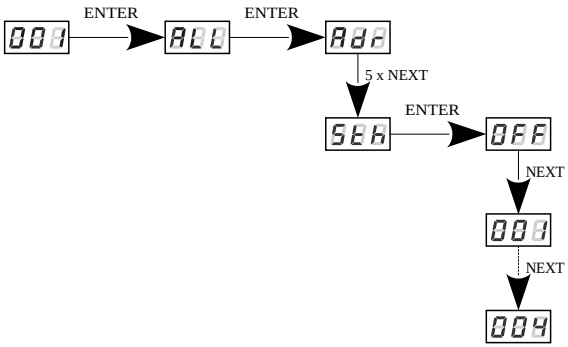

14 Selection of control curve

The driver has implemented the option of choosing one of three output control curves:

- linear ***Lin*** – the output values is linearly proportional to the control value,
- DALI – ***dAL***,
- exponential ***EP1*** with exponent 2.

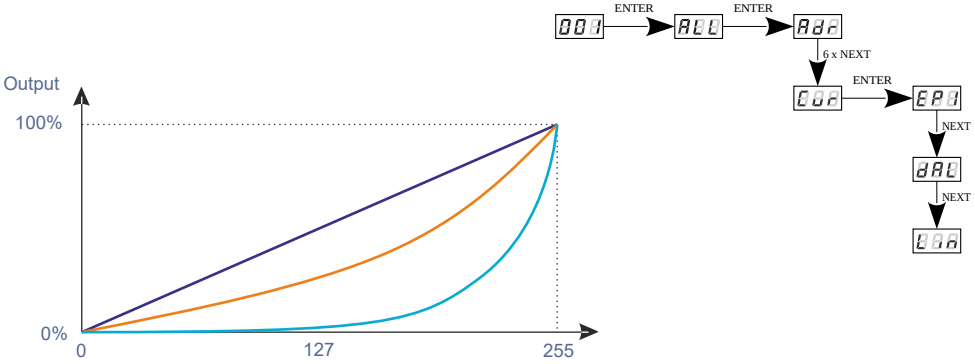

Curves:

- linear
- exponential with exponent 2
- DALI

NOTE! Only in device version *L0* it is possible to select the control curve.

15 Light control frequency

The ***Frq*** function allows for setting the basic control frequency for the LEDs. This function is extremely useful in applications for the television industry. By applying the "*flicker free*" technology, it is possible to avoid the unpleasant flickering effect which is caused by improper signal synchronization that controls the LEDs. The user can choose from the available frequency range from 366Hz up to 25.0kHz which can be smoothly changed using the *previous* or *next* buttons and selecting a different value.

The frequency value in the upper range (e.g. 1.50 = 1.5kHz) helps to avoid the flickering effects that are visible in video cameras.

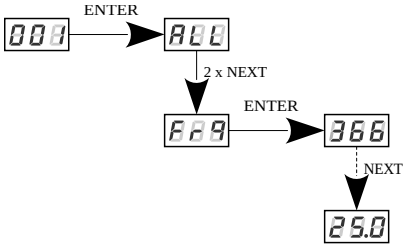

NOTE! In the *L0* version, the frequency setting is in the range of 488Hz – 25kHz. Information whether the device is the *L0* version is displayed during device start-up.

16 Screen saving (screen blanking)

The device is equipped with a feature that allows for turning off the backlight. This option is marked with the *SCr* sign. With this feature, the display is turned off after about 60s (if the keys of the device are not pressed). Of course, the device continues its operation without interfering with other parameters. Press any key to restore the backlight.

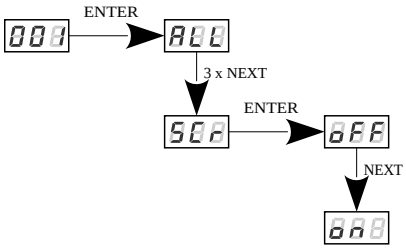

17 Default settings and device errors

If you have any difficulty accessing the device menu, e.g. it is not possible to enter a particular menu level or it is necessary to restore the device to its default settings, follow the instructions below.

In the first case, when a particular menu level cannot be accessed or menu items are displayed incorrectly, this may indicate that a saving-in-memory error has occurred. In such a case, try to restore the device to its default settings before sending the PX370 to the service center. If, after restoring to its default settings, the device still does not operate correctly, please send it to our service center.

17.1 Restore default settings

To restore the device to its default settings, press and hold the *previous* key while switching on the device. One of the messages that will be displayed will say ***dFl***, which means successful restoring to default settings (the *previous* key has to be held down while powering on the device, until the ***dFl*** message is displayed).

If this message is accepted by pressing *enter*, the default settings will be restored. The user can also exit this menu level without restoring the default settings. In order to do this, press the *escape* key.

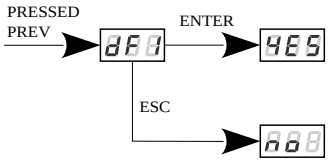

Please note that after restoring to default settings, all the operating parameters of the device will revert to the following ones:

- DMX address: 1
- driver operating mode: RGBW (4b – 4 byte)
- master mode: off
- number of sent DMX channels: 128
- white balance: off
- control curve: EP1
- no signal operating mode: scene (all channels controlled by 50%)
- frequency: 366Hz (488Hz in *L0 version*)
- smooth function: off (level 003 in *L0 version*)

NOTE! In the device version *L0*, restoring the factory settings is available from the device menu. Information whether the device is the *L0* version is displayed during device start-up.

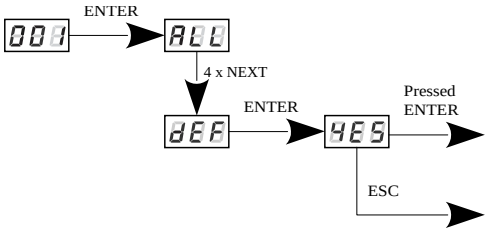

17.2 Error message

The device is equipped with a built-in memory work control function. If there are problems with the memory operation on the PX370 display, the *Err* message appears – memory error.

In this situation, select the *enter* key. The device will reload the default configuration and upload it to the memory. If after this operation, the *Err* message remains on the screen, the memory is permanently damaged and the unit must be sent to the service point.

18 Display flip function

As the driver should be installed (As far as possible) in a small distance from the controlled LEDs, the lack of space may force the necessity of mounting the device upside-down. In such case the displayed messages become illegible, that does not have the influence on device operation, but makes the programming much more difficult.

That is why the PX370 driver has a display flip feature available. It turns the screen 180°. The keys order is reversed as well.

To activate this both middle buttons (*previous* and *next*) of the driver have to be pressed in the same time for about 3s. To deactivate function the procedure is the same.

The figure shows how flip function works.

standard position

upside-down position

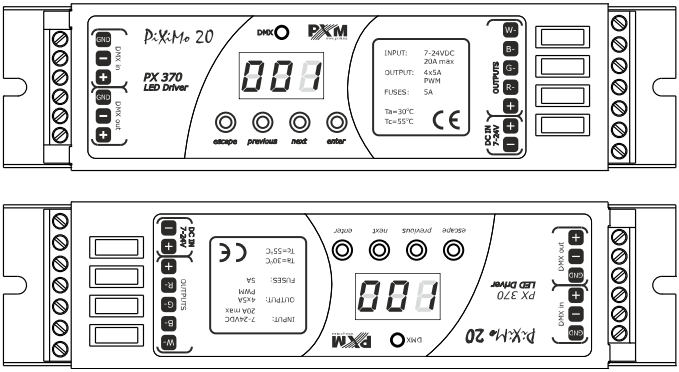

NOTE! The keys on the reverse of the display are set in the same way as the normal position, keys are reversed.

19 Device update

The update is possible using the PX313 USB / RS485 In device – details can be found in the manual for this module. The device update was also presented in detail on our YouTube channel.



https://www.youtube.com/watch?v=lSlFGeXVR_k

NOTE! The update file is available for download from the manufacturer's website. For device version *L0*, download the firmware with the suffix *L0*.

20 DMX signal connecting

PX370 have to be connected to DMX line in serial mode, with no branches on DMX control cable. That means that DMX line, from the signal source, must be connected to ***DMX IN*** pins of PX370 and later, directly from ***DMX OUT*** pins to the next device in DMX chain.

If the PX370 is the last DMX chain receiver there should be terminator (resistor 120 Ohm) mounted between "**+**" and "**-**" pins of ***DMX OUT*** section.

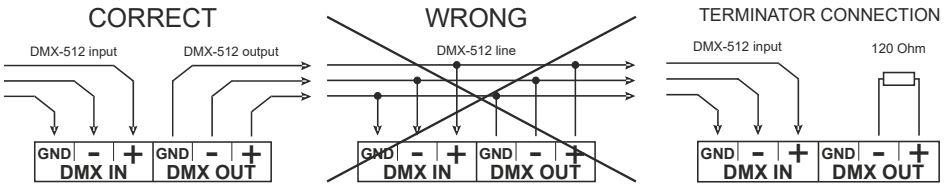

21 RDM – available parameters

The PX370 supports the DMX-RDM protocol. DMX protocol allows only of a one-way data transmission, while its extension the RDM protocol can transmit information in two directions. This makes possible to simultaneously send and receive information, and hence the possibility of monitoring activities of the compatible devices. Thanks to RDM some available settings of compatible devices may be programmed using this protocol.

List of RDM parameters supported by the PX370:

Parameter name	PiD	Description
SUPPORTED_PARAMETERS	0x0050	all supported parameters
PARAMETER_DESCRIPTION	0x0051	description of additional parameters
DEVICE_INFO	0x0060	information concerning the device
SOFTWARE_VERSION_LABEL	0x00C0	firmware version of the device
DMX_START_ADDRESS * / DMX_ADDRESS *	0x00F0	DMX starting address of the device; Range 1 – 512
IDENTIFY_DEVICE * / IDENTIFY *	0x1000	device identification; Two states are possible: identification is off (0x00 value) and identification is on (0x01 value).
STATUS_MESSAGES **	0x0030	information about device status
DEVICE_MODEL_ DESCRIPTION / DEV_MODEL_DESC	0x0080	device description, e.g. name
MANUFACTURER_LABEL	0x0081	manufacturer description, e.g. name
DEVICE_LABEL *	0x0082	additional device description; It is possible to enter an additional device description using up to 32 ASCII characters.
FACTORY_DEFAULTS	0x0090	device default settings
DMX_PERSONALITY / PERSONALITY	0x00E0	DMX operational mode

Parameter name	PiD	Description
DMX_PERSONALITY_ DESCRIPTION / PERSONALITY_ DESCRIPTION	0x00E1	description of individual operational modes
DEVICE_HOURS **	0x0400	operating time counted in hours
BALANCE_RED * / BALANCE_CH1 *	0x8011	value of control level of red channel balance
BALANCE_GREEN * / BALANCE_CH2 *	0x8012	value of control level of green channel balance
BALANCE_BLUE * / BALANCE_CH3 *	0x8013	value of control level of blue channel balance
BALANCE_WHITE * / BALANCE_CH4 *	0x8014	value of control level of white channel balance
SMOOTH_DIS_0/P2P_1/ TIM_2 * / SMOOTH_OFF/1/2/3/4 *	0x801A	the choice of options relating to the Smooth function
SMOOTH_TIME * / **	0x801B	Smooth time for *tiM* function chosen in subsection above
NO_SIG_P1-18|SC_19|ON_20| OFF_21|HLD_22 * / NOS_P0-17/SC/ON/OFF/HLD *	0x801C	choice of work mode for No DMX signal
SCENE_RED * / SCENE_CH1 *	0x801D	settings of red channel value for scene saved in PX370
SCENE_GREEN * / SCENE_CH2 *	0x801E	settings of green channel value for scene saved in PX370
SCENE_BLUE * / SCENE_CH3 *	0x801F	settings of blue channel value for scene saved in PX370
SCENE_WHITE * / SCENE_CH4 *	0x801F	settings of white channel value for scene saved in PX370

Parameter name	PiD	Description
SCREENSAVER_ON/OFF * / **	0x8022	settings of screensaver
SCREENSAVER_ENABLE *	0x8024	settings of screensaver
PROGRAM_SPEED *	0x8025	programs playback speed settings (playing next steps of program)
PROGRAM_FADE *	0x8026	settings of smooth transition between following steps of a program
BALANCE ON/OFF * / BALANCE_ENABLE *	0x8027	to activate or deactivate the balance of output channels
PWM_FREQENCY *	0x8028	LEDs refresh frequency
SERIAL_NUMBER *	0x8030	device serial number
DISPLAY_FLIP **	0x8031	inverting the meter display 180 degrees
CURVE_EP|DALI|LIN *	0x8049	setting the control curve

* - editable parameter

** - not available in L0 version

NOTE! The parameter names appearing in the *L0* version are displayed in blue.

22 Programming

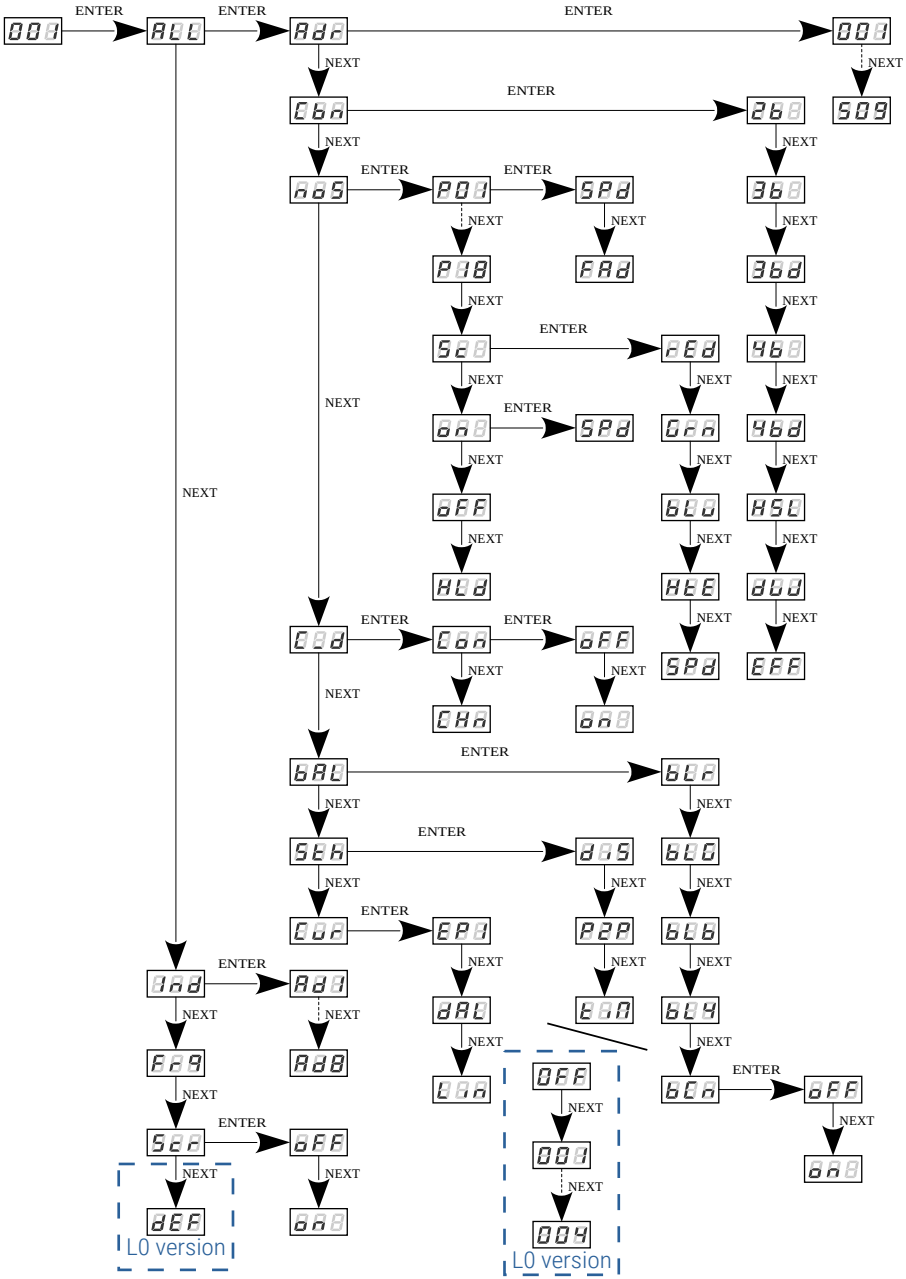

23 Connection scheme

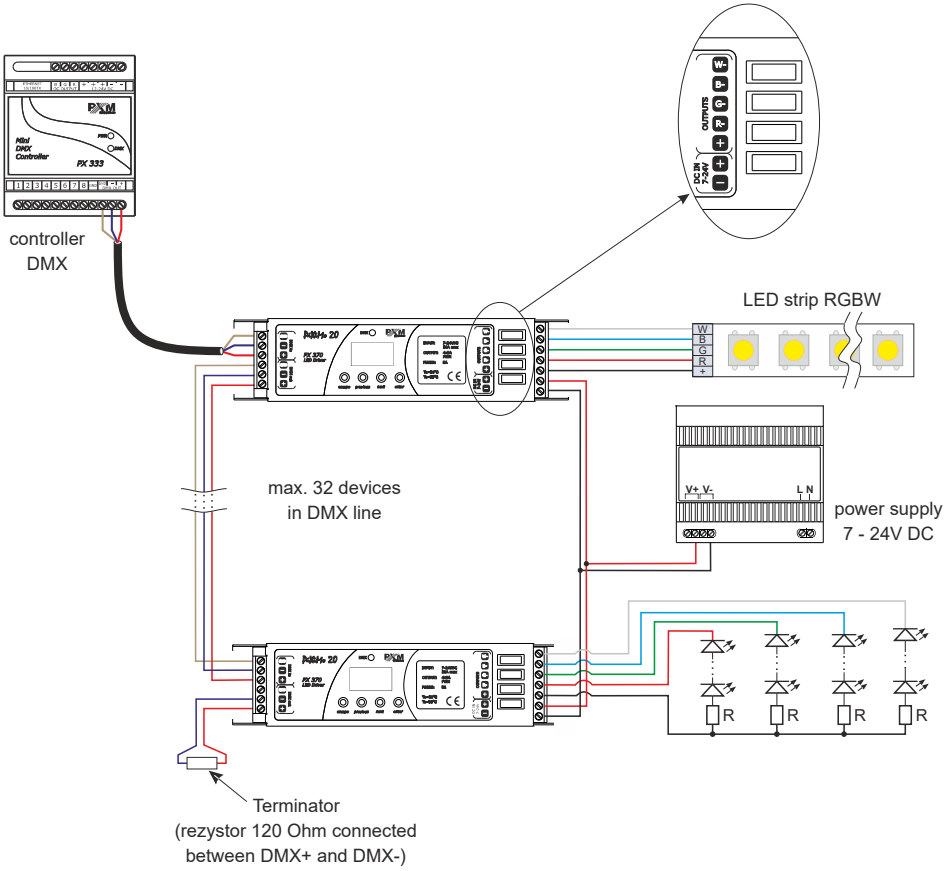

NOTE! That the driver is common anode type device. It is possible to connect lamps with 5-wires cable with a common "+" only.

Sample connection of warm and cold white LEDs strips for Dynamic White mode

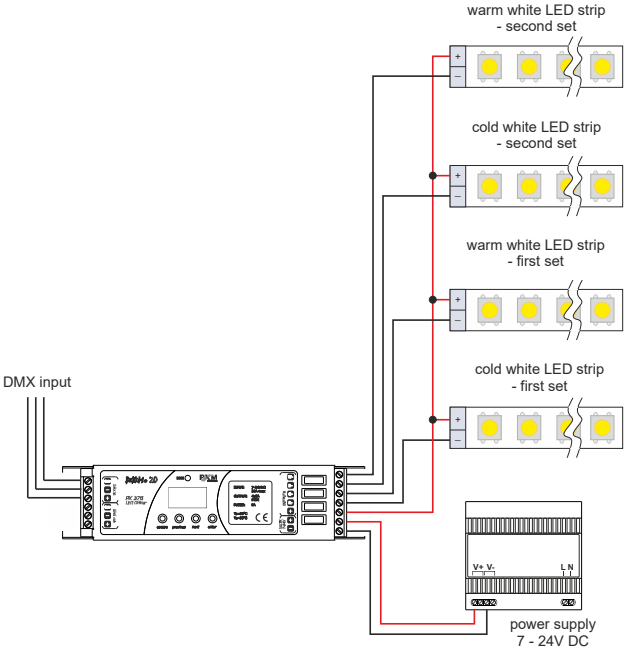

With such a connection of strips, in ***dW*** control mode, the value ***0*** on the color temperature channel corresponds to warm ***white color***, and value ***255*** – ***cold white***.

24 Dimensions

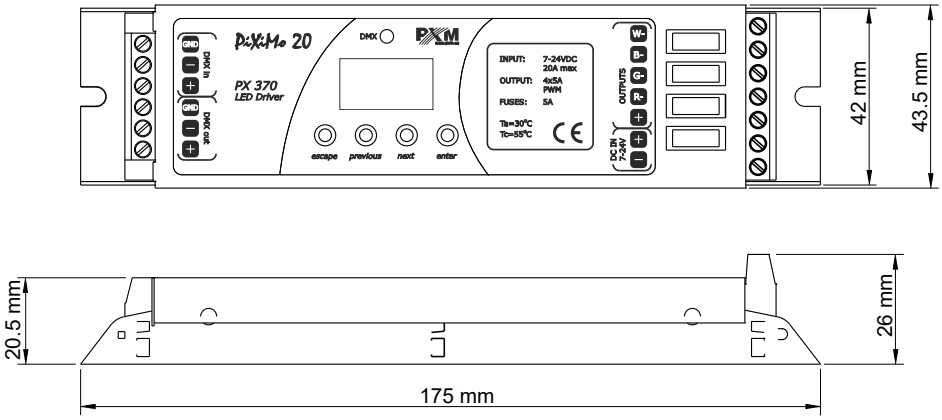

25 Technical data

type	PX370 PX370-L0
DMX channels	512
RDM protocol support	yes
power supply	7 – 24V DC
max. current consumption	20A
power consumption without load	19mA for 12V DC 17mA for 24V DC
output channel number	4
PWM frequency	1.5 – 25kHz
interpolated resolution of output control	14 bit (at PWM 1.5kHz)
programmable scenes	1
built-in programs	18
outputs current capacity	5A / channel
output sockets	screw connectors
Master mode	yes
weight	0.1kg
dimensions	width: 175mm height: 42mm depth: 26mm

Podłęże, 05.04.2019

DECLARATION OF CONFORMITY

PXM Marek Żupnik spółka komandytowa
Podłęże 654, 32-003 Podłęże

we declare that our product:

Product name:	Driver LED C.V. 4 x 5A
Product code:	PX370 PX370-L0

meets the requirements of the following standards, as well as harmonised standards:

PN-EN IEC 63000:2019-01	EN IEC 63000:2018
PN-EN 61000-4-2:2011	EN 61000-4-2:2009
PN-EN IEC 61000-6-1:2019-03	EN IEC 61000-6-1:2019
PN-EN 61000-6-3:2008	EN 61000-6-3:2007

and meets the essential requirements of the following directives:

2011/65/UE DIRECTIVE OF THE EUROPEAN PARLIAMENT AND OF THE COUNCIL of 8 June 2011 on the restriction of the use of certain hazardous substances in electrical and electronic equipment
Text with EEA relevance.

2014/30/UE DIRECTIVE OF THE EUROPEAN PARLIAMENT AND OF THE COUNCIL of 26 February 2014 on the harmonisation of the laws of the Member States relating to electromagnetic compatibility (recast)
Text with EEA relevance.

PXM
Marek Żupnik spółka komandytowa
32-003 Podłęże, Podłęże 654
NIP 677-002-54-53



mgr inż. Marek Żupnik.