PX714

PX714-L0

Driver LED C.C. 4 x 350mA

User manual

Table of Contents

1 Description....4
2 Safety conditions....5
3 Connector and control elements....6
4 Designation of displayed messages....6
5 Device programming....9
5.1 Button features....9
5.2 Group DMX address settings....9
5.3 Individual DMX address settings....10
5.4 Color settings mode....11
5.5 No DMX signal response....14
5.6 Description of programs....15
5.7 Master / Slave function....17
5.8 White balance....18
5.9 Smooth....19
5.10 Selection of control curve....21
5.11 Light control frequency....22
5.12 Screen saving (screen blanking)....23
5.13 Temperatures limits and sensor failure....23
5.14 Display function....25
5.15 Default settings and device errors....26
5.15.1 Restore default settings....27
5.15.2 Error message....28
6 Device update....29
7 DMX signal connecting....30
8 RDM – available parameters....31
9 Programming....35
10 Connection scheme....36
11 Dimensions....41
12 Technical data....42

Manufacturer reserves the right to make modifications in order to improve device operation.

PXM Marek Żupnik sp.k.
Podłęże 654
32-003 Podłęże
BDO register number 000005972

tel. +48 12 385 83 06
mail: info@pxm.pl
www.pxm.pl

Rev.1-4
23.09.2021

1 Description

The PX714 current driver has been designed for LED control.

The built-in DMX receiver allows for controlling 4 channels (e.g. R, G, B, W) using the DMX protocol directly. The wide range of power supply voltage (12 – 48V DC) and high current-carrying capacity (350mA max) enable controlling high numbers of LEDs.

The PX714 can be controlled the DMX signal and it can work on its own. In this case, the user has a fully programmable scene and 18 pre-programmed sequences for which the playback speed and smoothness of step changing can be freely set.

Driver PX714 can operate in different control modes: ***2b*** – brightness and one of the 256 colors define by the manufacturer, ***3b*** – each color RGB can be set separately, ***3bd*** – each color RGB can be set separately and dimmer (dimming all outputs), ***4b*** – each color RGBW can be set separately, ***4bd*** – each color RGBW can be set separately and dimmer (dimming all outputs)***HSL*** – responsible for hue, saturation and lightness, ***dW*** – dynamic white, control channels cold and warm white, ***EFF*** – it is available on 8 DMX channels and control R, G, B, W, Mode, Speed, Fade and Brightness.

The driver has a built-in "*flicker free*" frequency control system, which makes it especially suitable for use in the television industry.

The RGBW LEDs often differ quite substantially in parameters, this can cause problems in obtaining a white color (at full power especially). Therefore PX714 comes with a very useful function called "white balance". Thanks to it

you can choose color correction for each set of LEDs controlled by the device to achieve at full power the color white.

What is more, the driver has been equipped with an output for the temperature sensor and RDM protocol support. The support of the sensor allows for power reduction depending on temperature.

2 Safety conditions

PX714 LED Driver 4 x 350mA/48V is a device powered with safe voltage 12 – 48V; however, during its installation and use the following rules must be strictly observed:

1. The device may only be connected to 12 – 48V DC with current-carrying capacity compatible with technical data.
2. All the conductors should be protected against mechanical and thermal damage.
3. In the event of damaging any conductor, it should be replaced with a conductor of the same technical data.
4. Connection of power supply can only be made with a conductor of minimum cross-section area of 2,5mm^2 and DMX signal with shielded conductor.
5. All repairs and connections of outputs or DMX signal can only be made with cut off power supply.
6. PX714 should be strictly protected against contact with water and other liquids.
7. All sudden shocks, particularly dropping, should be avoided.

8. The device cannot be turned on in places with humidity exceeding 90%.
9. The device cannot be used in places with temperature lower than 2°C or higher than 40°C.
10. Clean with damp duster only.

3 Connector and control elements

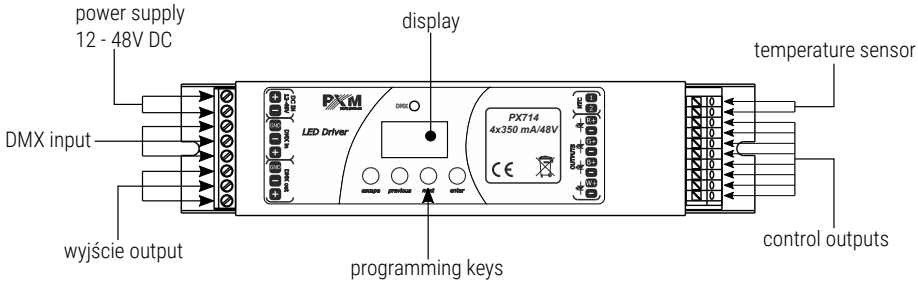

4 Designation of displayed messages

- DMX address of a device – a basic item in the MENU
- setting parameters for all channels simultaneously
- setting parameters for each channel individually
- DMX address setting
- control method selection (RGB, Lightness / Color, etc.)
- no DMX signal response method selection
- Master / Slave mode settings
- selection of the control curve
- Lightness / Color control mode



























3b	RGB control mode
3bd	RGB Dimmer control mode
4b	RGBW control mode
4bd	RGBW Dimmer control mode
HSL	HSL control mode – Hue / Saturation / Lightness
EFF	effect control mode
dUU	dynamic white mode
on	all outputs at 100%
oFF	all outputs off
Sc	scene
P17	program no. 17
HLd	maintaining the last value before the disappearance of the DMX signal
Ad1	DMX address settings for first channel
Con	Master mode on / off
CHn	number of channels being sent in the Master mode
bAL	white color balance setting
bLr	red balance
bLG	green balance
bLb	blue balance
bL4	white balance
bCn	white color balance on / off
SPd	program playback speed
FAd	level of steps change smoothness in the program
rEd	red color during scene programming
Grn	green color during scene programming

























 blue color during scene programming

 white color during scene programming

 basic frequency of brightness control

 screen blanking

 memory error message

 restore default device settings menu

 restore default device settings menu

 function to limit power

 value of the limit activation temperature

 value of the maximum limit temperature

 current temperature

 the highest temperature recorded by the sensor

 the lowest temperature recorded by the sensor

 temperature limit is switched off and it is not possible to read the following temperatures: maximum, minimum, and current or when a mode which does not use all channels is set, and unused channels will have the address of the channel

5 Device programming

After you switch on the module, its display shows the program version for a brief moment. To access the main menu, press "*enter*", and the display will show *Adr*. Press "*previous*" or "*next*" to select the appropriate menu and press "*enter*" to confirm your selection.

5.1 Button features

escape – goes back to the previous MENU level or discards changes made

previous – scrolls to the previous feature on the same MENU level or decreases the parameter's value

next – scrolls to the next feature on the same MENU level or increases the parameter's value

enter – enters the next MENU level and confirms changes made

5.2 Group DMX address settings

The menu of the PX714 driver allows for setting the DMX address within a range between 1 and 505 – 511 depending on work mode of device.
For example in RGB mode it occupies three consecutive DMX addresses.
If start address is set to 510, the last channel is occupied by address 512.

To set the DMX address:

1. Set the "*Adr*" function.
2. Use the "*next*" or "*previous*" buttons to set the selected DMX address.
3. Push the "*enter*" button to confirm choose.

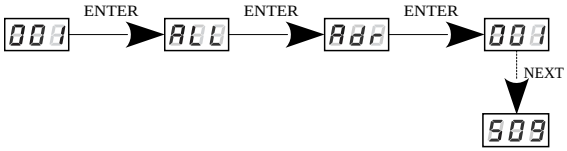

5.3 Individual DMX address settings

The PX714 module has an option that allows for changing individual settings. It enables assigning any DMX address to every output channel. The simplest example of implementation of this function is to control the lightness of one-color LEDs connected to all outputs. In such case, the same address must be assigned to all channels so that all outputs are controlled by one slider on the control panel.

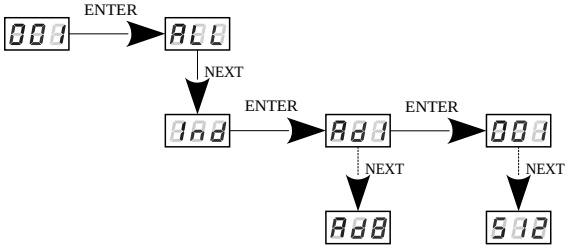

5.4 Color settings mode

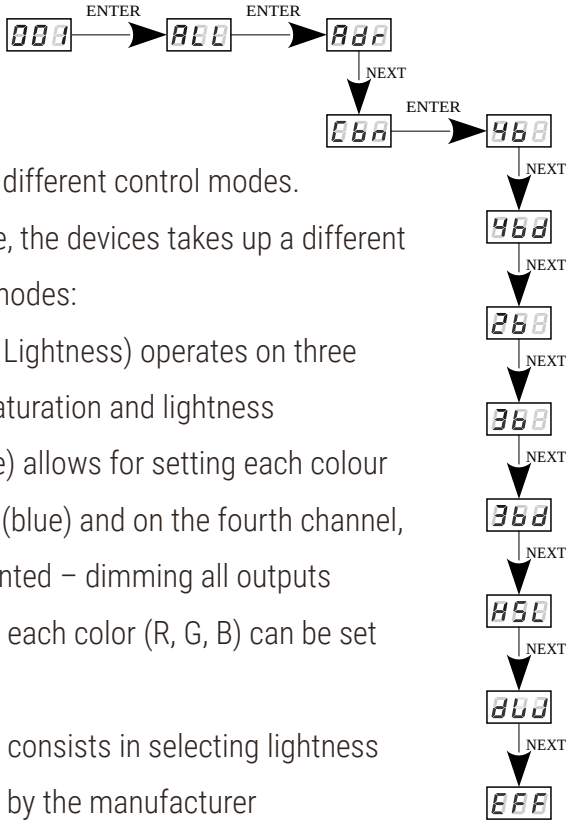

The PX714 driver can operate in different control modes.

Depending on the selected mode, the devices takes up a different numbers of channels, possible modes:

The ***HSL*** mode (Hue, Saturation, Lightness) operates on three channels, responsible for hue, saturation and lightness

The ***3bd*** mode (4-channel, 4-byte) allows for setting each colour individually: R (red), G (green), B (blue) and on the fourth channel, the Dimmer function is implemented – dimming all outputs

The ***3b*** mode (3-channel, 3-byte) each color (R, G, B) can be set separately

The ***2b*** mode (2-channel, 2-byte) consists in selecting lightness and one of the 256 colors define by the manufacturer

The ***4b*** mode (4-byte) direct control of output channels by means of DMX channels

The ***4bd*** mode (4-byte plus a dimmer) four DMX channels directly control the driver output channels, the fifth channel dims values on all the channels at the same time

The ***dW*** – dynamic white – control of 2 channel groups: cold white + warm white, by means of four DMX channels. The first DMX channel is responsible for color temperature of the first group, and the other channel – for lightness

of the group. Similarly, the third and the fourth DMX channels control the other group.

The *EFF* mode – effects control – it is available on 8 DMX channels and allows to choose the right effect and parameters (description of the *EFF* mode is below)

Description guide of *EFF* mode settings (table is on the next page):

Channel 1 – red color

Channel 2 – green color

Channel 3 – blue color

Channel 4 – white color

Channel 5 – operating mode selection

Channel 6 – speed settings (higher value – quicker changes)

Channel 7 – fade settings (higher value – smoother transition)

Channel 8 – lightness settings (higher value – stronger glow)

sign "x" – possibility to control a given parameter of a selected mode

sign "-" – no possibility to control a given parameter of a selected mode

CHANNEL 1 RED	CHANNEL 2 GREEN	CHANNEL 3 BLUE	CHANNEL 4 WHITE	CHANNEL 5 MODE	CHANNEL 6 SPEED	CHANNEL 7 FADE	CHANNEL 8 BRIGHTNESS
-	-	-	-	<0–7> Program 1	x	x	x
-	-	-	-	<8–15> Program 2	x	x	x
-	-	-	-	<16–23> Program 3	x	x	x
-	-	-	-	<24–31> Program 4	x	x	x
-	-	-	-	<32–39> Program 5	x	x	x
-	-	-	-	<40–47> Program 6	x	x	x
-	-	-	-	<48–55> Program 7	x	x	x
-	-	-	-	<56–63> Program 8	x	x	x
-	-	-	-	<64–71> Program 9	x	x	x
-	-	-	-	<72–79> Program 10	x	x	x
-	-	-	-	<80–87> Program 11	x	x	x
-	-	-	-	<88–95> Program 12	x	x	x
-	-	-	-	<96–103> Program 13	x	x	x
-	-	-	-	<104–111> Program 14	x	x	x
-	-	-	-	<112–119> Program 15	x	x	x
-	-	-	-	<120–127> Program 16	x	x	x
-	-	-	-	<128–135> Program 17	x	x	x
-	-	-	-	<136–143> Program 18	x	x	x
-	-	-	-	<144–151> OFF	-	-	-
x	x	x	x	<152–169> Strobo 10%	x	-	x
x	x	x	x	<170–199> Strobo 20%	x	-	x
x	x	x	x	<200–229> Strobo 50%	x	-	x
x	x	x	x	<230–255> RGBD	-	-	x

5.5 No DMX signal response

This function is used both to protect the installation against the DMX signal loss and to obtain control over LEDs without connecting an external controller. Once it is activated, if there is no DMX signal the module will realize a desired function independently. Reconnecting the DMX signal will automatically break the realized function and the module will once again follow the commands transmitted via the DMX line.

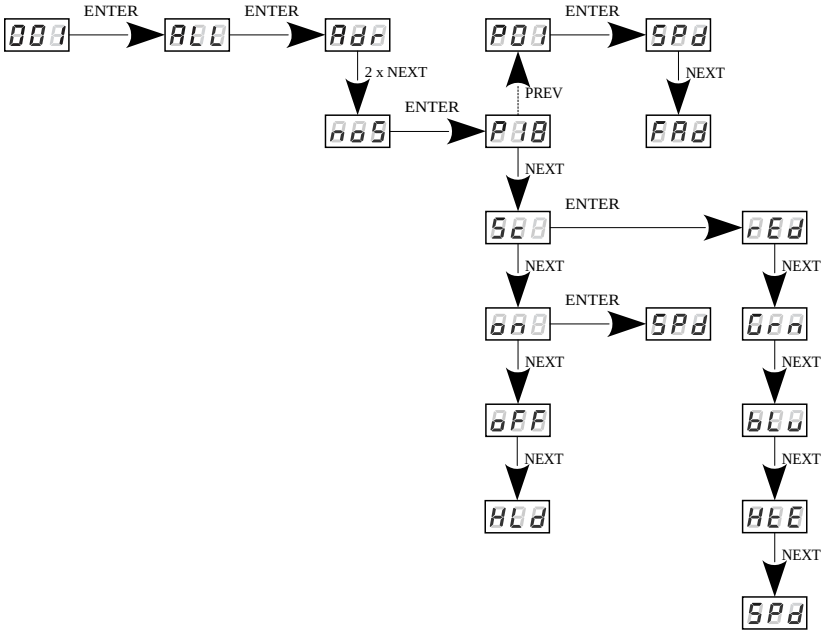

P01 – *P18* – choosing a ready program provided in the device software. For each program it is possible to set the speed (*SPd*) of the effects reproduction on range *0,1 – 99,9s* and smoothness of change of steps (*FAd*) in range *0 – 100*, where *0* is a step transition, and *100* completely smooth.

Sc –self-programmed scene in which it possible to set values for RGB colors (*rEd*, *Grn*, *bLu*, *HtE*) in range *0 – 255* for each color separately. Additionally can set the scene entry time (*SPd*) after decay DMX signal in range *0,1 – 99,9s*.
on – activation of all outputs at 100% with the possibility of setting the switch-on time (*SPd*) all outputs after decay DMX signal
oFF – disabling all outputs after DMX signal loss
HLd – maintaining the last value before the disappearance of the DMX signal.

5.6 Description of programs

The following tables show the values for each output channel (*R*, *G*, *B*, *W*) in programs from 1 up 18 (*P01* – *P18*). The value *255* corresponds to the maximum lightness level on a given channel, *127* – 50% of power level, *0* – full channel blanking.

		P01	P02	P03	P04	P05	P06	P07	P08	P09
Step 1	R	255	0	0	0	255	255	0	255	0
	G	0	0	0	0	0	0	255	0	255
	B	0	255	0	0	0	0	255	0	0
	W	0	0	255	0	255	0	0	0	255
Step 2	R	0	0	255	0	255	255	0	0	0
	G	255	255	0	0	255	0	255	255	0
	B	0	0	0	255	0	255	0	0	255
	W	0	0	0	0	0	0	255	0	0
Step 3	R	0	255	0	0	0	0	255		
	G	0	0	0	0	255	0	255		
	B	255	0	0	0	0	255	0		
	W	0	0	255	0	255	0	0		
Step 4	R			0	0	0	0			
	G			255	255	255	255			
	B			0	0	255	255			
	W			0	0	0	0			
Step 5	R			0	0	0	0			
	G			0	0	0	255			
	B			0	0	255	0			
	W			255	0	255	0			
Step 6	R			0	255	255	255			
	G			0	0	0	255			
	B			255	0	255	0			
	W			0	0	0	0			

		P10	P11	P12	P13	P14	P15	P16	P17	P18
Step 1	R	255	0	0	0	255	0	0	0	0
	G	0	0	0	0	0	255	0	127	0
	B	0	0	0	0	0	0	255	255	0
	W	0	0	0	0	127	127	127	0	0
Step 2	R	0	255	0	0	255	127	127	127	255
	G	0	0	255	0	127	255	0	255	255
	B	255	0	0	255	0	0	255	127	255
	W	0	0	0	0	0	0	0	0	127
Step 3	R					255	0	0	255	
	G					0	255	0	127	
	B					0	0	255	0	
	W					127	127	127	0	
Step 4	R					255	0	0	127	
	G					0	255	127	0	
	B					127	127	255	127	
	W					0	0	0	0	

5.7 Master / Slave function

The PX714 module has a built-in DMX-512 receiver and can be controlled from any desktop or controller running in this standard. Moreover, it is equipped with a programmable function of response to no DMX signal (***noS***). With 18 built-in default programs, it is possible to obtain interesting effects without an external controller. However, in larger installations, several PX714 drivers implementing the same program cannot provide a full playback synchronization. Therefore, PX714 has a Master feature. When it is activated,

the module changes from a DMX receiver into a transmitter of this signal and sends programs to the other modules (which are set as Slave). If the Master function is active, this is indicated by a fast flashing of the DMX signaling diode.

With this solution, it is possible to make a precise synchronization even in very large installations without using an external controller.

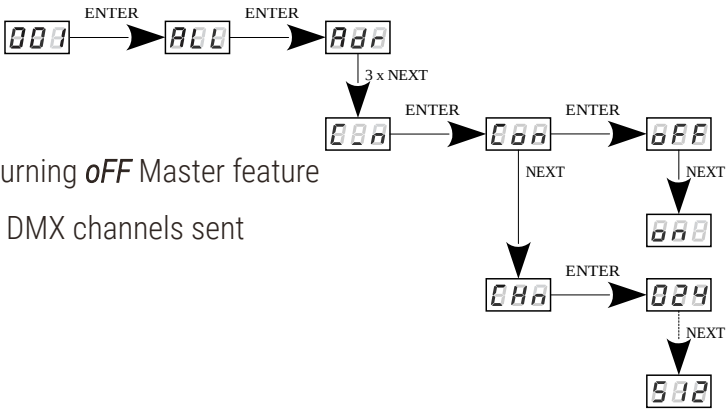

Con – turning *on* or turning *oFF* Master feature

Chn – the number of DMX channels sent

5.8 White balance

Sometimes, there can be problems with getting white color on the RGBW series LEDs. This may be a result of using diodes with different technical parameters. For this reason, the PX714 module is equipped with a white balance function. This option allows for choosing a correct color temperature for full activation of all 4 outputs (white color).

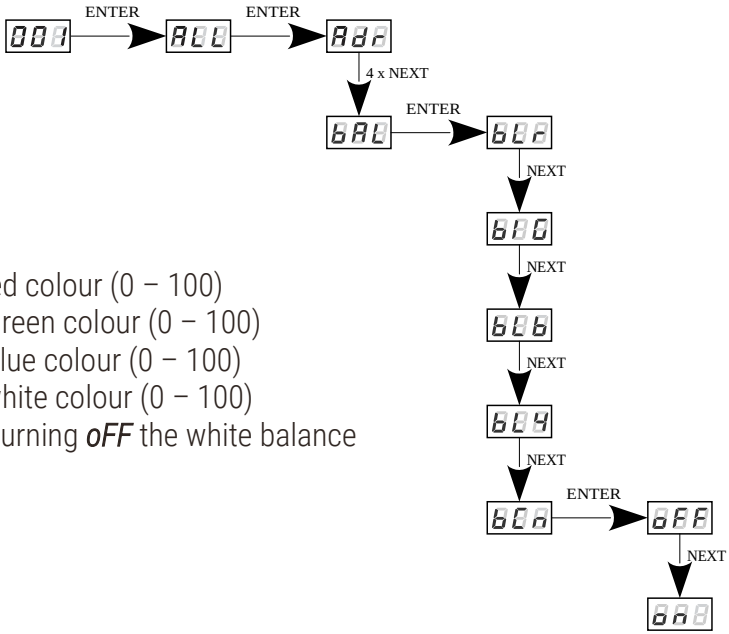

bLr – value for the red colour (0 – 100)
bLG – value for the green colour (0 – 100)
bLb – value for the blue colour (0 – 100)
bLY – value for the white colour (0 – 100)
bCn – turning *on* or turning *oFF* the white balance

5.9 Smooth

The driver is equipped with a smooth option. Smooth feature allows for smooth changes in lightness and color. When it is set to On the transition between successive DMX values sent to the lamp (e.g. corresponding to changes in lightness) are smooth with no visible twitches, which prevents the common light "vibrations" effect. Two consecutive DMX values sent to the lamp are smoothed linearly between the DMX signal packets for the selected option or the time interval set in the menu in range 10 – 999ms.

The smooth function may slightly slow down the lamp's response rate to changes in the DMX signal; therefore, it is possible to disable this option. This can be done by checking the SMS parameter and confirming the selection by pressing "*enter*".

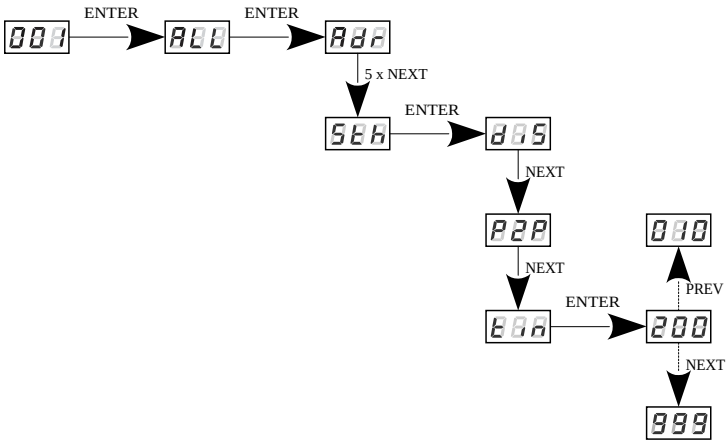

NOTE! In the *L0* version, the smoothing settings are presented below. Information whether the device is the *L0* version is displayed during device start-up.

By default, the ***Sth*** option is enabled at level **004**. The options are:

- **Off** – smoothing disabled,
- **001** – **004** – smoothing level adjustable from 1 to 4 (1 – fast, 4 – very smooth).

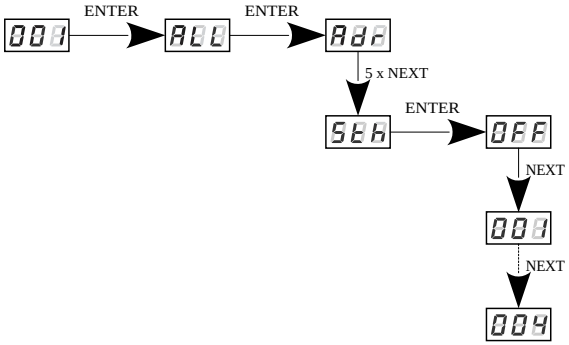

5.10 Selection of control curve

The driver has implemented the option of choosing one of three output control curves:

- linear ***Lin*** – the output values is linearly proportional to the control value,
- DALI – ***dAL***,
- exponential ***EP1*** with exponent 2.

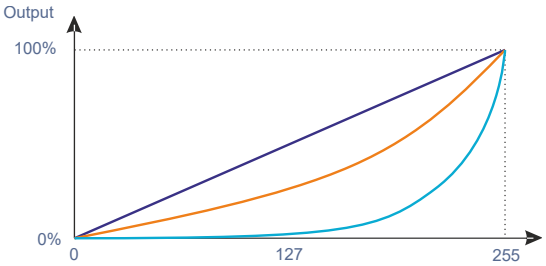

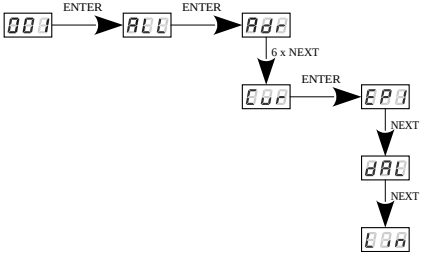

Curves:

- linear
- exponential with exponent 2
- DALI

NOTE! Only in device version *L0* it is possible to select the control curve.

5.11 Light control frequency

The ***Frq*** function allows for setting the basic control frequency for the LEDs. This function is extremely useful in applications for the television industry. By applying the "*flicker free*" technology, it is possible to avoid the unpleasant flickering effect which is caused by improper signal synchronization that controls the LEDs. The user can choose from the available frequency range from 366Hz up to 25.0kHz which can be smoothly changed using the "***previous***" or "***next***" buttons and selecting a different value.

The frequency value in the upper range (e.g. 1.50 = 1.5kHz) helps to avoid the flickering effects that are visible in video cameras.

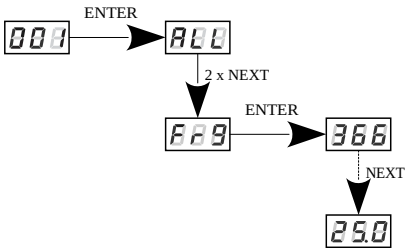

NOTE! In the *L0* version, the frequency setting is in the range of 488Hz – 25kHz. Information whether the device is the *L0* version is displayed during device start-up.

5.12 Screen saving (screen blanking)

The device is equipped with a feature that allows for turning off the backlight. This option is marked with the *SCr* sign. With this feature, the display is turned off after about 60s (if the keys of the device are not pressed). Of course, the device continues its operation without interfering with other parameters. Press any key to restore the backlight.

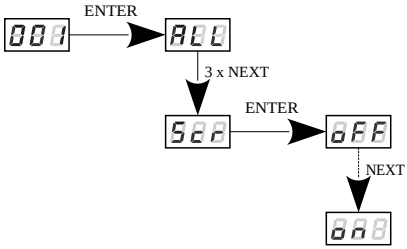

5.13 Temperatures limits and sensor failure

PX714 has been equipped with a function that limits the output power depending on the temperature value read using the external sensor mounted in the lamp. This allows for programming a temperature value which, if reached, limits the power or disables the lamp supplied by the driver. The product is designed to work only with the NTC 4K7 type thermistor.

The meaning of the statement:

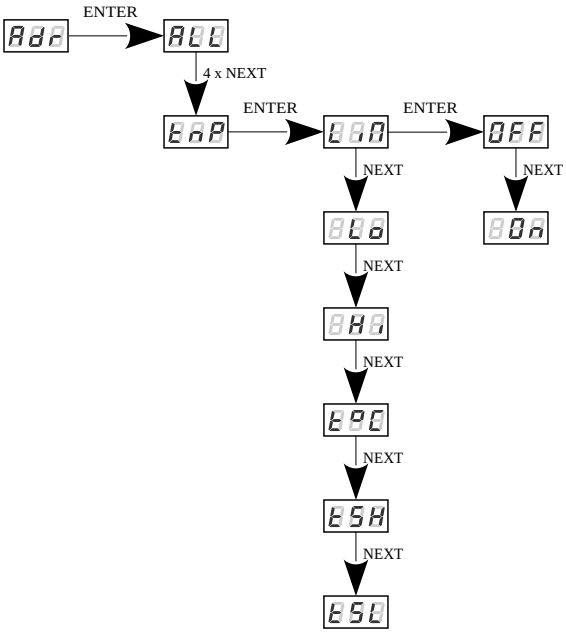

tMP – power limitation management depending on temperature read on the external sensor

LiM – powering *On* and *OFF* of the power limitation function

Lo – limit activation temperature value can be set between +30°C and +60°C

Hi – maximum limit temperature value set in the range from +70°C up to +90°C

t°C – current temperature

tSH – the highest temperature recorded by the sensor

tSL – the lowest temperature recorded by the sensor

error messages:

Er0 – no thermistor or thermistor open

ErC – shorted thermistor

- - - – *LiM* temperature limit was not turned on

The course of the power limitation between *Lo* and *Hi* values is linear as shown in the graph below:

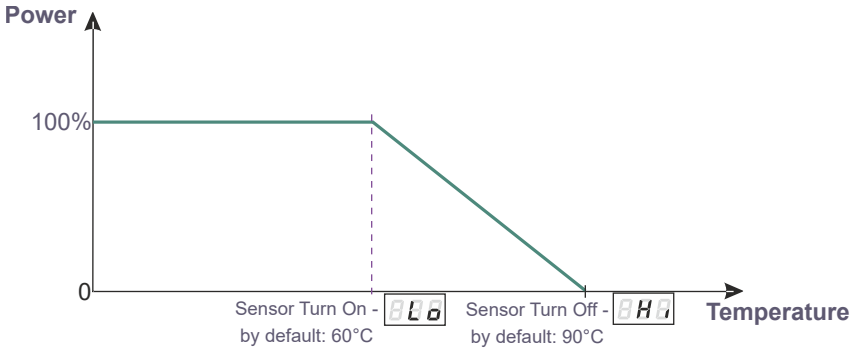

If this function is activated and the temperature sensor is incorrectly connected or there is no sensor, the driver displays a relevant message – *Er0* at the current temperature location, and instead of the first DMX address, i.e. at the very beginning of the menu. To disable the message, connect an appropriate sensor or disable the temperature limit.

5.14 Display function

As the driver should be installed (as far as possible) in a small distance from the controlled LEDs, the lack of space may force the necessity of mounting the device upside-down. In such case the displayed messages become illegible, that does not have the influence on device operation, but makes the programming much more difficult.

That is why the PX714 driver has a display flip feature available. It turns the screen 180°. The keys order is reversed as well.

To activate this both middle buttons ("*previous*" and "*next*") of the driver have to be pressed in the same time for about 3s. To deactivate function the procedure is the same.

standard position

upside-down position

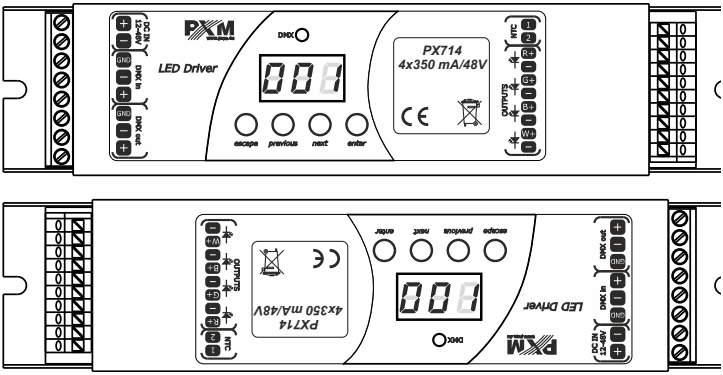

The figure shows how flip function works.

NOTE! The keys on the reverse of the display are set in the same way as the normal position, keys are reversed.

5.15 Default settings and device errors

If you have any difficulty accessing the device menu, e.g. it is not possible to enter a particular menu level or it is necessary to restore the device to its default settings, follow the instructions below.

In the first case, when a particular menu level cannot be accessed or menu items are displayed incorrectly, this may indicate that a saving-in-memory error has occurred. In such a case, try to restore the device to its default settings before sending the PX714 to the service center. If, after restoring to its default settings, the device still does not operate correctly, please send it to our service center.

5.15.1 Restore default settings

To restore the device to its default settings, press and hold the "*previous*" key while switching on the device. One of the messages that will be displayed will say *dFl*, which means successful restoring to default settings (the "*previous*" key has to be held down while powering on the device, until the *dFl* message is displayed).

If this message is accepted by pressing "*enter*", the default settings will be restored. The user can also exit this menu level without restoring the default settings. In order to do this, press the "*escape*" key.

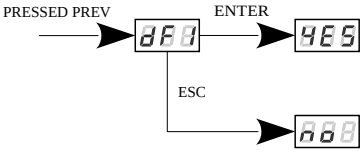

Please note that after restoring to default settings, all the operating parameters of the device will revert to the following ones:

- DMX address: 1
- driver operating mode: RGBW (4b – 4 byte)
- master mode: off
- number of sent DMX channels: 128
- white balance: off
- screensaver: off
- control curve: EP1 (version *L0*)
- no signal operating mode: scene (all channels controlled by 50%)
- frequency: 366Hz (488Hz version *L0*)
- smooth function: off (001 version *L0*)

NOTE! In the device version *L0*, restoring the factory settings is available from the device menu. Information whether the device is the *L0* version is displayed during device start-up.

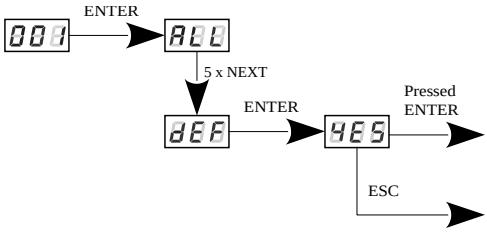

5.15.2 Error message

The device is equipped with a built-in memory work control function. If there are problems with the memory operation on the PX714 display, the ***Err*** message appears – memory error.

In this situation, select the "***enter***" key. The device will reload the default configuration and upload it to the memory. If after this operation, the ***Err*** message remains on the screen, the memory is permanently damaged and the unit must be sent to the service point.

6 Device update

The update is possible using the PX313 USB / RS485 In device – details can be found in the manual for this module. The device update was also presented in detail on our YouTube channel.



https://www.youtube.com/watch?v=lSlFGeXVR_k

NOTE! The update file is available for download from the manufacturer's website. For device version *L0*, download the firmware with the suffix *L0*.

7 DMX signal connecting

PX714 have to be connected to DMX line in serial mode, with no branches on DMX control cable. That means that DMX line, from the signal source, must be connected to ***DMX IN*** pins of PX714 and later, directly from ***DMX OUT*** pins to the next device in DMX chain.

If the PX714 is the last DMX chain receiver there should be terminator (resistor 120 Ohm) mounted between "***DMX+***" and "***DMX-***" pins of ***DMX OUT*** section.

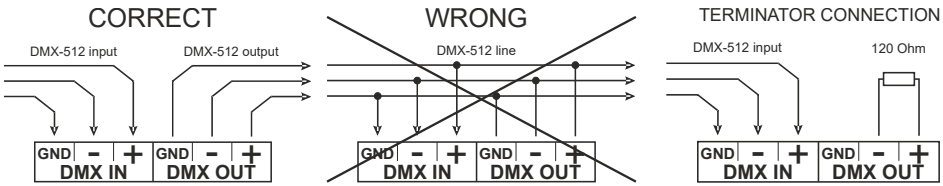

8 RDM – available parameters

The PX714 supports the DMX-RDM protocol. DMX protocol allows only of a one-way data transmission, while its extension the RDM protocol can transmit information in two directions. This makes possible to simultaneously send and receive information, and hence the possibility of monitoring activities of the compatible devices. Thanks to RDM some available settings of compatible devices may be programmed using this protocol.

List of RDM parameters supported by the PX714:

Parameter name	PiD	Description
SUPPORTED_PARAMETERS	0x0050	all supported parameters
PARAMETER_DESCRIPTION	0x0051	description of additional parameters
DEVICE_INFO	0x0060	information concerning the device
SOFTWARE_VERSION_LABEL	0x00C0	firmware version of the device
DMX_START_ADDRESS * / DMX_ADDRESS *	0x00F0	DMX starting address of the device; Range 1 – 512
IDENTIFY_DEVICE * / IDENTIFY *	0x1000	device identification; Two states are possible: identification is off (0x00 value) and identification is on (0x01 value).
STATUS_MESSAGES **	0x0030	information about device status
DEVICE_MODEL_ DESCRIPTION / DEV_MODEL_DESC	0x0080	device description, e.g. name

Parameter name	PiD	Description
MANUFACTURER_LABEL	0x0081	manufacturer description, e.g. name
DEVICE_LABEL *	0x0082	additional device description; It is possible to enter an additional device description using up to 32 ASCII characters.
FACTORY_DEFAULTS	0x0090	device default settings
DMX_PERSONALITY / PERSONALITY	0x00E0	DMX operational mode
DMX_PERSONALITY_ DESCRIPTION / PERSONALITY_ DESCRIPTION	0x00E1	description of individual operational modes
DEVICE_HOURS **	0x0400	operating time counted in hours
TEMPERATURE_LIMIT_ ON/OFF *	0x800E	temperature limitation activation for the temperature sensor connected to the driver
TEMPERATURE_ THRESHOLD_LOW *	0x800F	lower temperature value for which the temperature limitation is being activated
TEMPERATURE_ THRESHOLD_HIGH *	0x8010	upper temperature value for which the temperature limitation is active, i.e. the cut-off temperature for exits from the driver
BALANCE_RED * / BALANCE_CH1 *	0x8011	value of control level of red channel balance
BALANCE_GREEN * / BALANCE_CH2 *	0x8012	value of control level of green channel balance

Parameter name	PiD	Description
BALANCE_BLUE * / BALANCE_CH3 *	0x8013	value of control level of blue channel balance
BALANCE_WHITE * / BALANCE_CH4 *	0x8014	value of control level of white channel balance
SMOOTH_DIS_0/P2P_1/ TIM_2 * / SMOOTH_OFF/1/2/3/4 *	0x801A	selection of the Smooth function option
SMOOTH_TIME * / **	0x801B	Smooth time for *tiN* function chosen in subsection above
NO_SIG_P1-18|SC_19|ON_20| OFF_21|HLD_22 * / NOS_P0-17/SC/ON/OFF/HLD *	0x801C	choice of work mode for No DMX signal
SCENE_RED * / SCENE_CH1 *	0x801D	settings of red channel value for scene saved in PX714
SCENE_GREEN * / SCENE_CH2 *	0x801E	settings of green channel value for scene saved in PX714
SCENE_BLUE * / SCENE_CH3 *	0x801F	settings of blue channel value for scene saved in PX714
SCENE_WHITE * / SCENE_CH4 *	0x8020	settings of white channel value for scene saved in PX714
SCREENSAVER_ON/OFF * / **	0x8022	settings of screensaver
SCREENSAVER_ENABLE *	0x8024	settings of screensaver
PROGRAM_SPEED *	0x8025	programs playback speed settings (playing next steps of program)
PROGRAM_FADE *	0x8026	settings of smooth transition between following steps of a program

Parameter name	PiD	Description
BALANCE ON/OFF * / BALANCE_ENABLE *	0x8027	to activate or deactivate the balance of output channels
PWM_FREQENCY *	0x8028	LEDs refresh frequency
SERIAL_NUMBER *	0x8030	device serial number
DISPLAY_FLIP **	0x8031	inverting the meter display 180 degrees
CURVE_EP|DALI|LIN *	0x8049	setting the control curve

* - editable parameter

** - not available in L0 version

NOTE! The parameter names appearing in the *L0* version are displayed in blue.

9 Programming

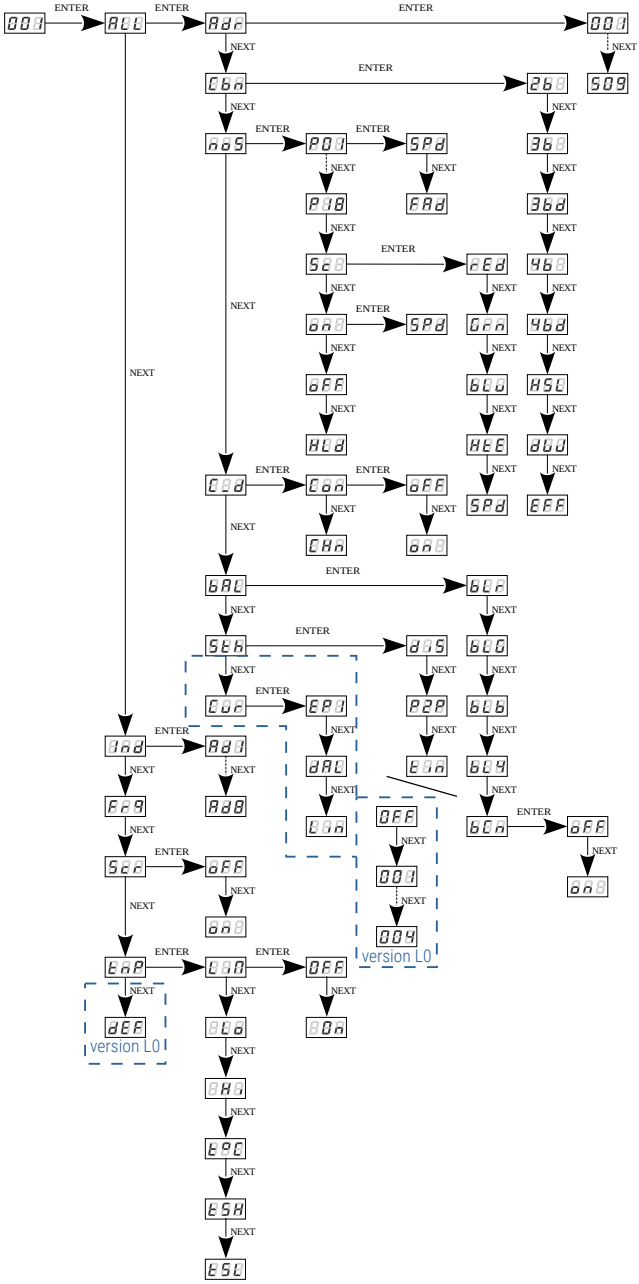

10 Connection scheme

Power supply and ADM connection diagram

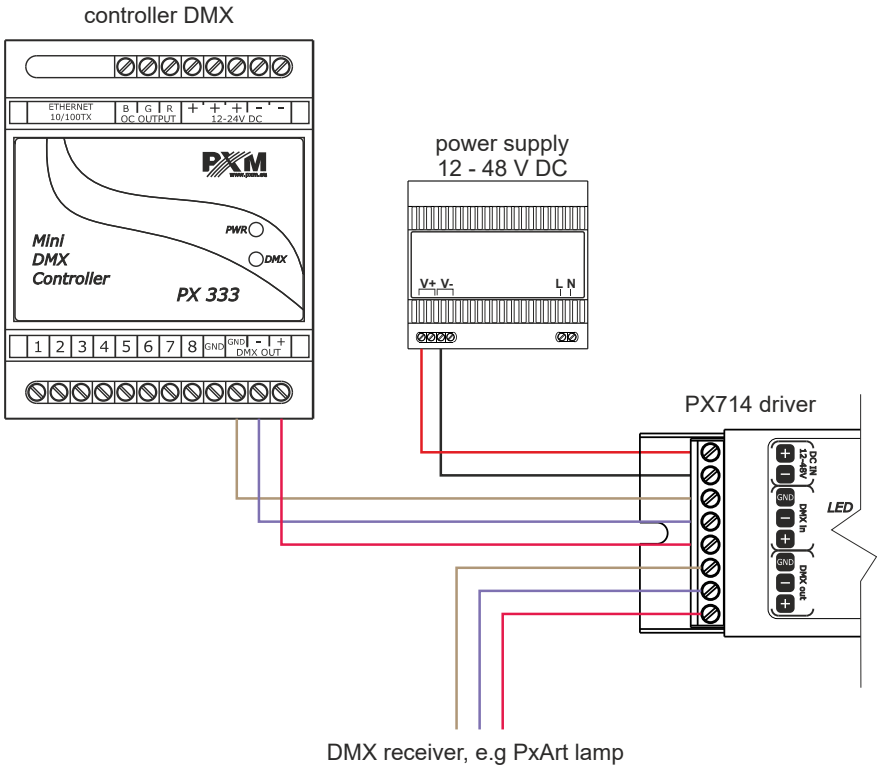

Connection of lamps powered by 350mA		
Driver LED	Power supply	Number of LEDs on one channel
PX714	12V	1* – 3
	24V	4 – 6
	48V	7 – 12

* - when connecting one red LED, connect a rectifier diode (e.g. 1N4007) to the circuit, as shown in the diagram below:

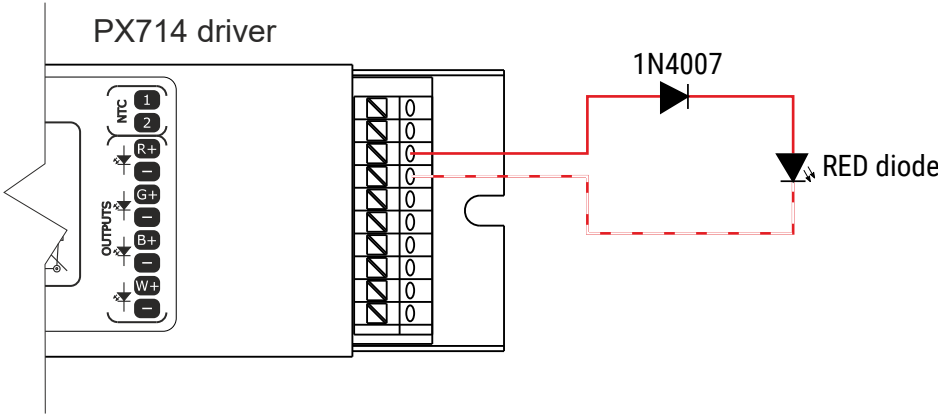

Diagram of RGBW lamp connection

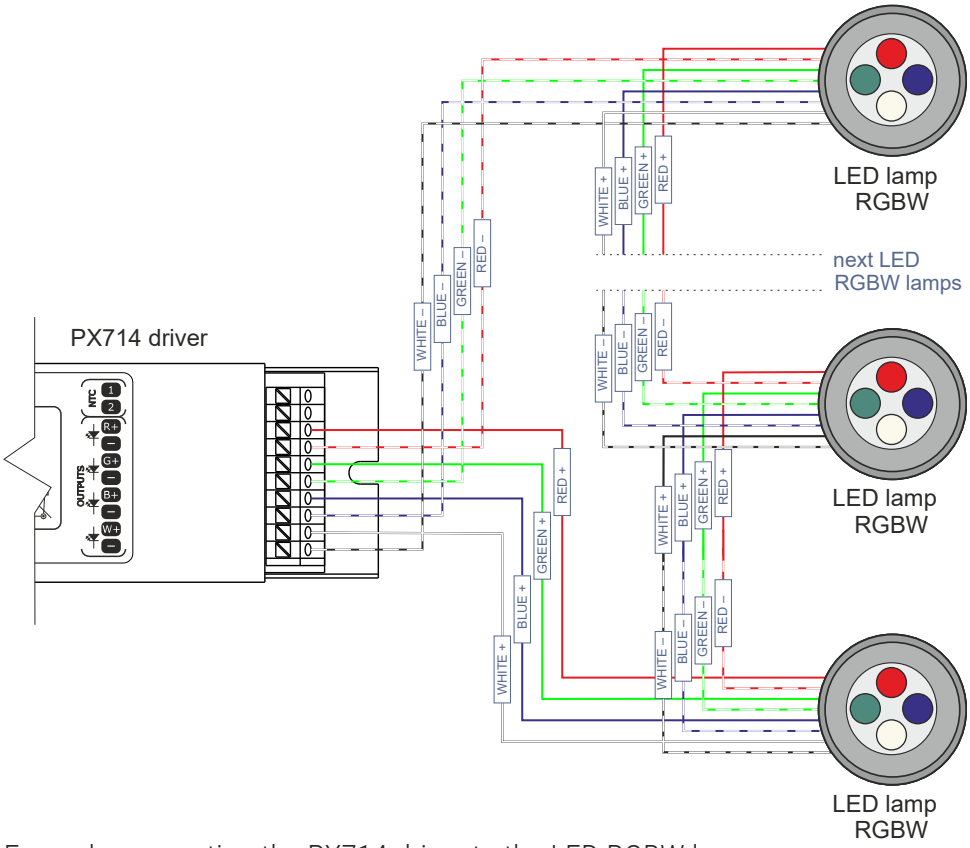

Example connection the PX714 driver to the LED RGBW lamp:

- the cables should be connected with the correct order of colors
- LEDs should be connected only in series
- controlled LEDs can be connected using two conductors only, i.e. two per channel
- the number of serially connected LEDs depends on the driver and supply voltage

Connection diagram of the RGBW lamp with a built-in temperature sensor (NTC 4K7 thermistor)

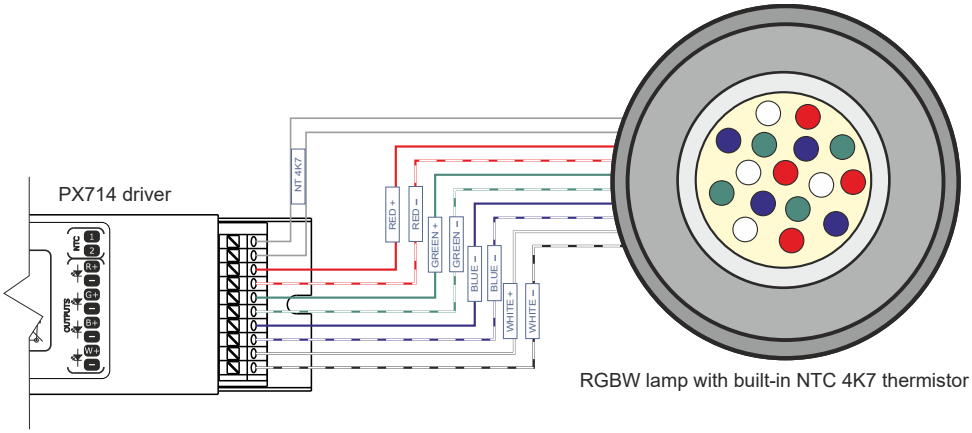

The connection of the NTC 4K7 thermistor is applicable only when one lamp is connected to the driver. This is due to the fact that the device can read the temperature from only one lamp.

Monochrome lamp in DW mode connection diagram

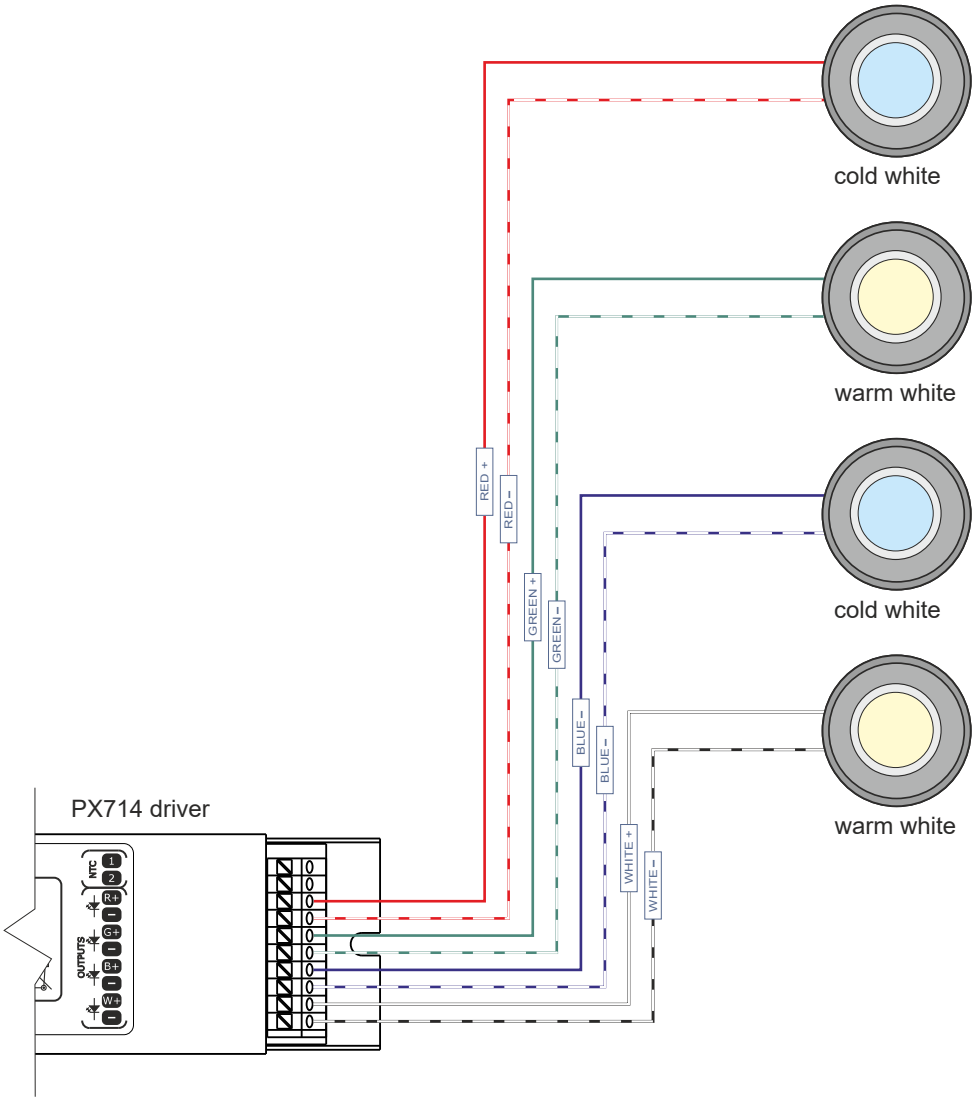

11 Dimensions

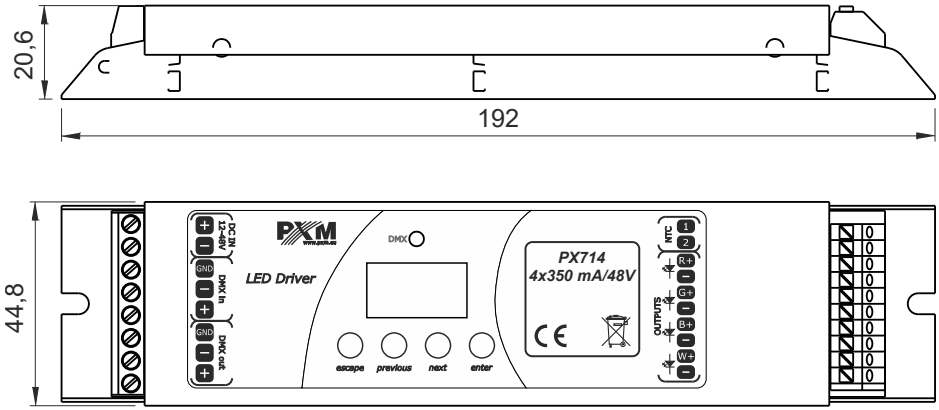

12 Technical data

type	PX714 PX714-L0
DMX channels	512
RDM protocol support	yes
power supply	12 – 48V DC
max. current consumption	max. 1.4A
power consumption without load	1W
output channels number	4
interpolated resolution of output control	16 bit
programmable scenes	1
built-in programs	18
outputs load capacity	350mA / channel (+2% ÷ -5%)
output short circuit protection	yes
output sockets	screw connectors / plug connectors
plug connectors	solid wire: 0.2 – 1.5mm^2 stranded wire: 0.2 – 1.5mm^2 stranded wire with ferrule: 0.25 – 1mm^2
Master mode	yes
weight	0.2kg
dimensions	width: 192mm height: 44,8mm depth: 20,6mm

Podłęże, 03.04.2019

DECLARATION OF CONFORMITY

PXM Marek Żupnik spółka komandytowa
Podłęże 654, 32-003 Podłęże

we declare that our product:

Product name:	Driver LED C.C. 4 x 350mA
Product code:	PX714 PX714-L0

meets the requirements of the following standards, as well as harmonised standards:

PN-EN IEC 63000:2019-01	EN IEC 63000:2018
PN-EN 61000-4-2:2011	EN 61000-4-2:2009
PN-EN IEC 61000-6-1:2019-03	EN IEC 61000-6-1:2019
PN-EN 61000-6-3:2008	EN 61000-6-3:2007

and meets the essential requirements of the following directives:

2011/65/UE DIRECTIVE OF THE EUROPEAN PARLIAMENT AND OF THE COUNCIL of 8 June 2011 on the restriction of the use of certain hazardous substances in electrical and electronic equipment
Text with EEA relevance.
2014/30/UE DIRECTIVE OF THE EUROPEAN PARLIAMENT AND OF THE COUNCIL of 26 February 2014 on the harmonisation of the laws of the Member States relating to electromagnetic compatibility (recast)
Text with EEA relevance.

PXM
Marek Żupnik spółka komandytowa
32-003 Podłęże, Podłęże 654
NIP 677-002-54-53



mgr inż. Marek Żupnik.