PX786

Gate 4 DMX

User manual

Table of contents

1 Description....3
2 Safety conditions....4
3 Connectors and control elements....5
4 Programming the device....6
4.1 Button features....6
4.2 Description of information parameters....7
4.3 Network settings....8
4.4 Art-Net / sACN protocol change....9
4.5 Art-Net configuration in mode Art-Net → DMX....10
4.6 sACN configuration....12
4.7 Presets menu....13
4.8 Settings for the other parameters....13
4.8.1 Art-Net / sACN signal loss....14
4.8.2 DMX parameters....15
4.8.3 Dimming the screen and LEDs....16
4.9 Setting the display contrast....17
5 Indicator lights....18
6 Art-Net commands....20
7 Upgrade....21
8 Connection scheme....23
9 Dimensions....24
10 Technical data....25

Manufacturer reserves the right to make modifications in order to improve device operation.

PXM Marek Żupnik sp.k.
Podłęże 654
32-003 Podłęże
BDO register number 000005972

tel. +48 12 385 83 06
mail: info@pxm.pl
www.pxm.pl

Firm. 1.11
Rev.
04.06.2024

1 Description

Gate 4 DMX is a gate that converts Art-Net / sACN signals to four output DMX512 ports. It is powered by 12 – 24V DC. The device is enclosed in a housing for a 35mm DIN rail protecting it against mechanical damage.

The device comes equipped with an Ethernet interface working in 10/100BaseTX protocol. The protocol version is Art-Net4 (compatible with Art-Net 1 – 4). DMX512 ports have optical and galvanic isolation.

On the housing there are six LEDs installed, four two-color ones responsible for data transfer on DMX ports and two one-color ones informing about the status of the Art-Net / sACN network connection.

The gate PX786 has a display and four buttons that allows to change the configuration: Art-Net / sACN, Ethernet and DMX settings (such as: *Brake*, *MAB*, *MBF* and the number of DMX channels transmitted).

2 Safety conditions

PX786 is a device powered with safe voltage 12 – 24V DC; however, during installation and use the following rules must be strictly observed:

1. The device may only be connected to 12 – 24V DC with current-carrying capacity compatible with technical data.
2. All the conductors should be protected against mechanical and thermal damage.
3. In the event of damaging any conductor, it should be replaced with a conductor of the same technical data.
4. Only a shielded cable should be used to connect the DMX signal.
5. All repairs and connections of DMX signal can only be made with cut off power supply.
6. PX786 should be strictly protected against contact with water and other liquids.
7. All sudden shocks, particularly dropping, should be avoided.
8. The device cannot be turned on in places with humidity exceeding 90%.
9. The device cannot be used in places with temperature lower than +2°C or higher than +40°C.
10. Clean with damp duster only.

3 Connectors and control elements

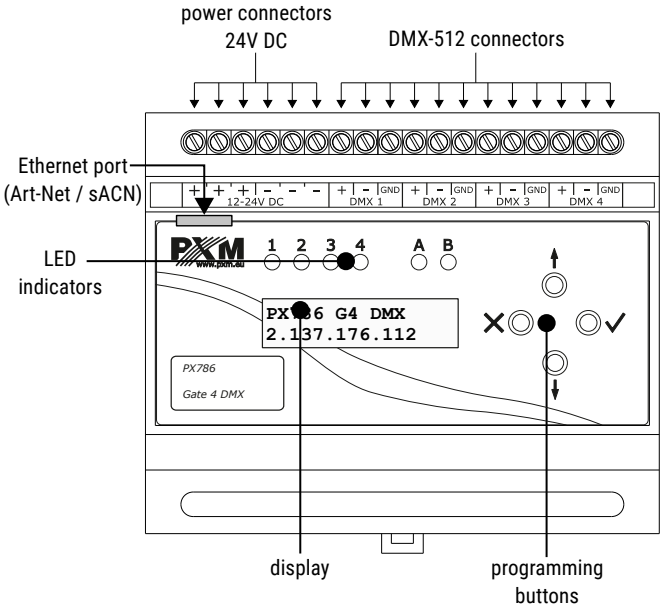

4 Programming the device

4.1 Button features

✕ (escape)	- allows you to exit the parameter being programmed without saving any changes or to move to a higher menu level
↓ (next)	- moves you back through the menu or decreases values being set
↑ (previous)	- moves you forward through the menu or increases values being set
✓ (enter)	- allows you to enter the programming mode and confirm the values set

Where a particular parameter is editable, in the bottom right-hand corner the edit symbol ⁞⁞, and pressing ✓ allows you to proceed to edit the first field.

A field that is editable is shown within square brackets [...] or *, and the ↓ / ↑ button allows you to change the value of such a field. If you press ✓ you will be taken to another field or the value will be saved and you will exit the edit mode for a give parameter.

The icon **->** allows you to go deeper into the menu.

4.2 Description of information parameters

The PX786 provides you with the following device information, such as:

- gateway model and current IP address (if an IP address is assigned with DHCP, the symbol * is added),
- protocol (*Art-Net* / *sACN*),
- universe numbers on DMX ports,
- signal conversion direction (*out*),
- serial number of the gateway and version of the installed software,
- individual MAC address of the device.

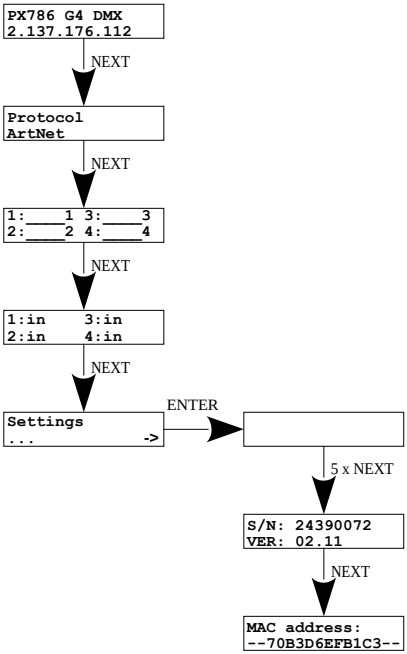

4.3 Network settings

In the ***Network config.*** menu of the device you can change the gate static IP address ***IP address***, static sub-net mask ***Subnet mask***, default static gate ***Gateway address***, turn ***On*** or turn ***Off*** the DHCP protocol ***DHCP***, ***UDP port***. The default port for the Art-Net protocol is port 0x1936 (6454 decimal).

If DHCP is ***turned off***, the gate operates in a static configuration (***IP address***, ***IP address***, ***Gateway address***). If DHCP is ***turned on***, the gate will start up using static settings, but will attempt to acquire new network configuration from the DHCP server.

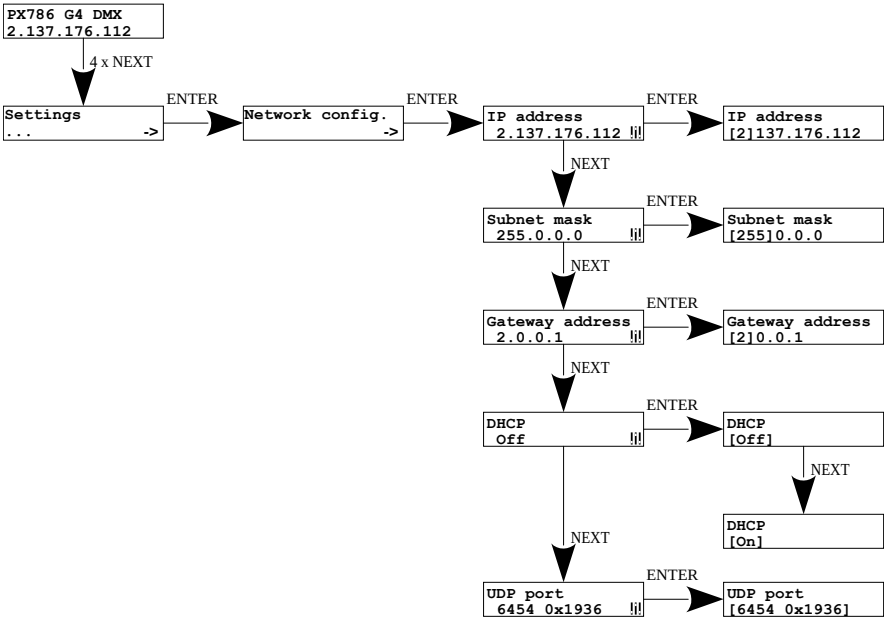

4.4 Art-Net / sACN protocol change

Before advanced configuration, the user should select the protocol in which the gateway is to operate. There are two options to choose from:

- *Art-Net*,
- *sACN*.

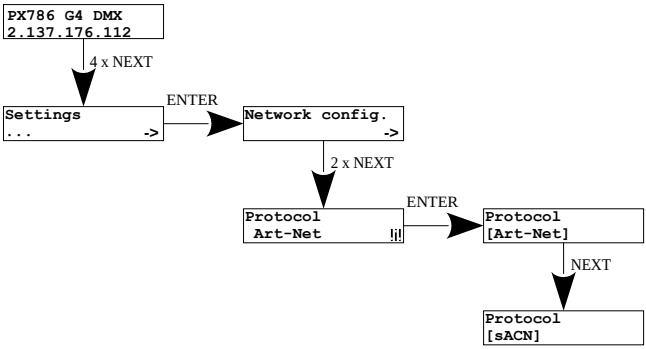

4.5 Art-Net configuration in mode Art-Net → DMX

Below is a diagram showing the ***ART-NET config.*** menu and a description of individual parameters that can be changed depending on the user's needs.

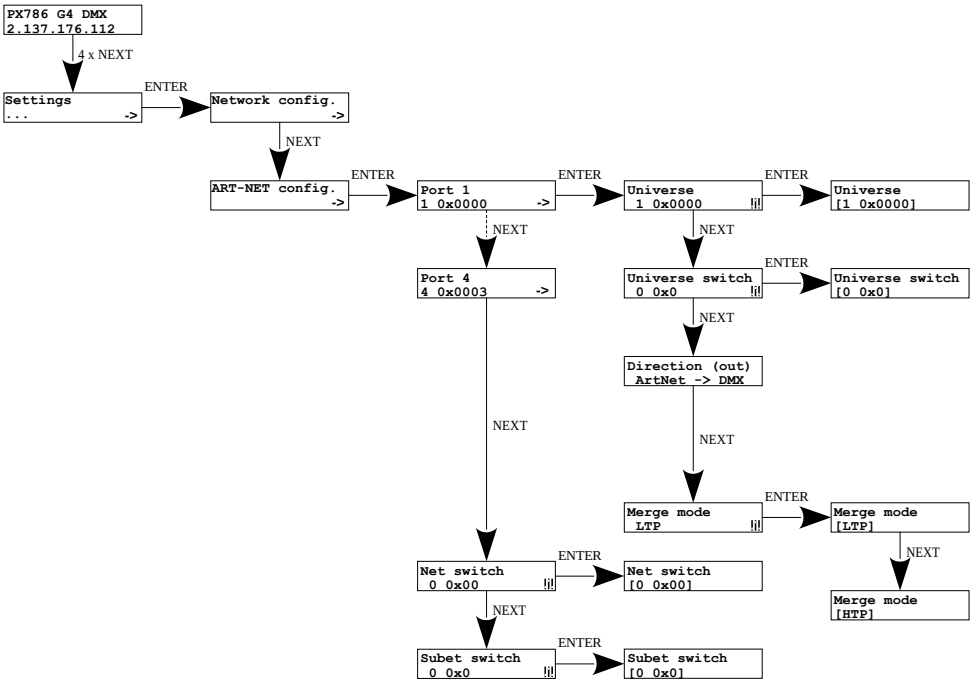

Parameters:

- *Port 1 – 4* – individual settings of Art-Net ports
- *Universe* – the universe number on which a given port runs. The selectable range is 0 – 32767. The number is displayed in two formats: decimal and hexadecimal.
- S: (Sub-Net switch) sub-net number in the Art-Net protocol (range 0 – 15 dec, 0x0 – 0xf hex)
- U: Universe switch

Hexadecimal notation allows you to easily differentiate universe components, for example: 0xNNSU, where:

- NN: (Net switch) network number in the Art-Net protocol (range 0 – 127 dec, 0x0 – 0x7f hex)
- S: (Sub-Net switch) sub-net number in the Art-Net protocol (range 0 – 15 dec, 0x0 – 0xf hex)
- U: Universe switch

Using *Universe* you can change all 3 universe number components (*Net switch*, *Sub-Net switch* and *Universe switch*). There is a possibility of quick preview from the main menu of Universes assigned to a given port, the diagram below:

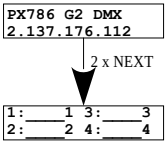

NOTE! A change of a port universe number that entails changing the components Net or Sub-Net will automatically result in a change of the universe of the other ports. This is due to specific nature of the Art-Net protocol addressing, where the gate has a common value for the fields Net and Sub-Net for all the four ports.

- *Universe switch* – universe number in the Art-Net protocol (range 0 – 15 dec, 0x0 – 0xf hex). Individual setting of a Universe switch value for a given port. It is a component of the entire Universe number for the port.

- *Direction* – seated to the signal conversion direction (Art-Net to DMX).
- *Merge mode* – port merging mode setting. Available values of *LTP* (Latest Takes Precedence) and *HTP* (Highest Takes Precedence).
- *Net switch* – setting a network value in the Art-Net protocol. It is a common setting for all the ports. The range is 0 – 127 (0x00 – 0x7f).
- *Subnet switch* – setting a sub-network value in the Art-Net protocol. It is a common setting for all the ports. The range is 0 – 15 (0x0 – 0xf).

4.6 sACN configuration

Below is a diagram showing the *sACN config.* menu and a description of individual parameters that can be changed depending on the user's needs.

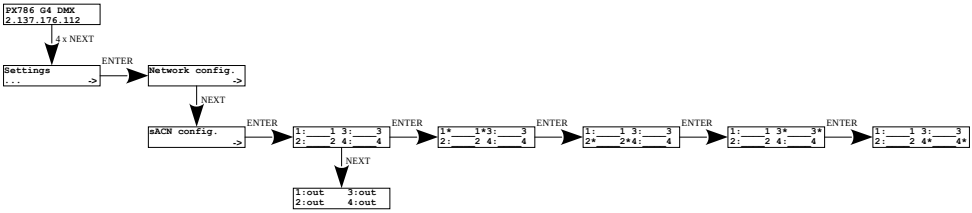

Parameters:

- *Port 1 – 4* – universe settings on DMX ports,
- *Port 1 – 4: out* – seated the direction of signal conversion (sACN to DAM).

4.7 Presets menu

In the gate are predefined 2 standard sets of factory settings: *2.x.x.x* and *10.x.x.x*, which additionally have the option of global change protocol change (*Art-Net* / *sACN*).

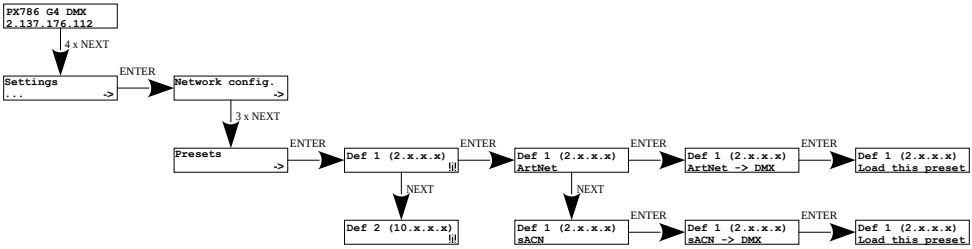

4.8 Settings for the other parameters

The menu containing the remaining *Miscellaneous* screen settings allows you to:

- changing the device's behavior when the Art-Net / sACN signal disappears,
- changing DMX signal parameters,
- turning on or off the screen saver and signal diodes.

4.8.1 Art-Net / sACN signal loss

In the ***Protocol timeout*** menu, the user can define the ***Stop DMX signal*** parameter:

- ***On*** – turns off DMX transmission when the Art-Net / sACN signal disappears,
- ***Off*** – ports continue transmitting the last value.

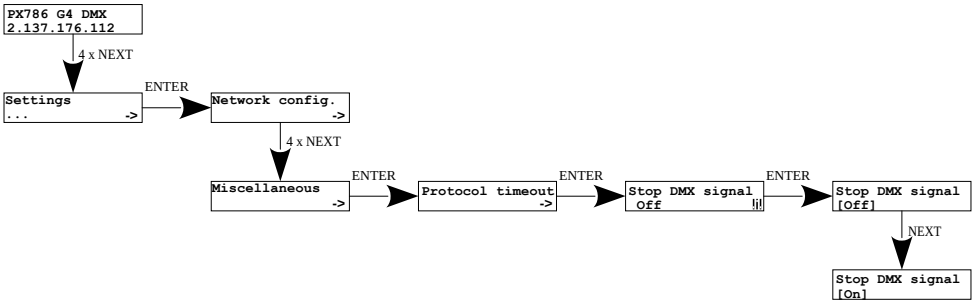

4.8.2 DMX parameters

Global configuration of DMX parameters:

- *Break time* – duration of a low state along the line at the beginning of DMX packet transmission (range 176µs – 352µs),
- *MAB time* – (Mark After Break) – MAB length – interval after the break that is present in each packet according to standard DMX512 (range 12µs – 88µs),
- *MBF time* – (Mark Between Frames) – interval between DMX512 frames (channels). MBFs separate stop bits of one channel from the start bits of another channel (range 0µs – 76µs).
- *Output channels* – defines the number of channels sent out through a given port
    - *Auto* – the number of channels in a port is equal to the number of channels received by the Art-Net protocol,
    - *0 – 512* – you can force broadcasting of the selected number of channels in the range from 0 – 512.

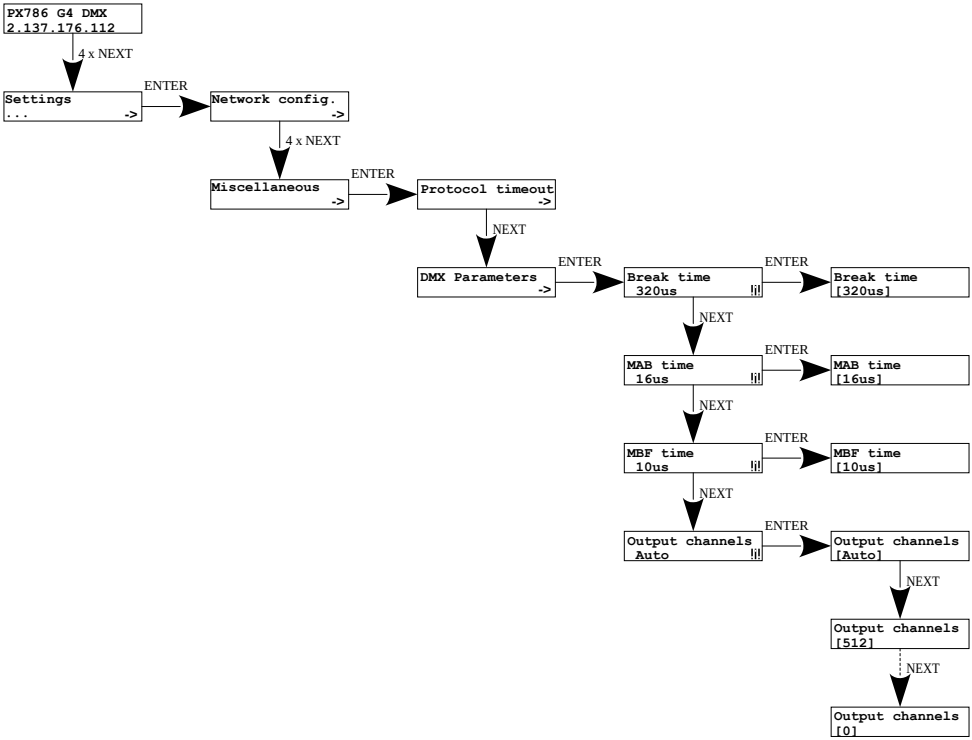

4.8.3 Dimming the screen and LEDs

Turning the screensaver and the signal diodes ***on*** or ***off*** is available in the *Screensaver* menu. After 15 seconds, the display and all signal diodes turn off. The device continues to operate without interfering with other parameters. To restore the backlight, press any key.

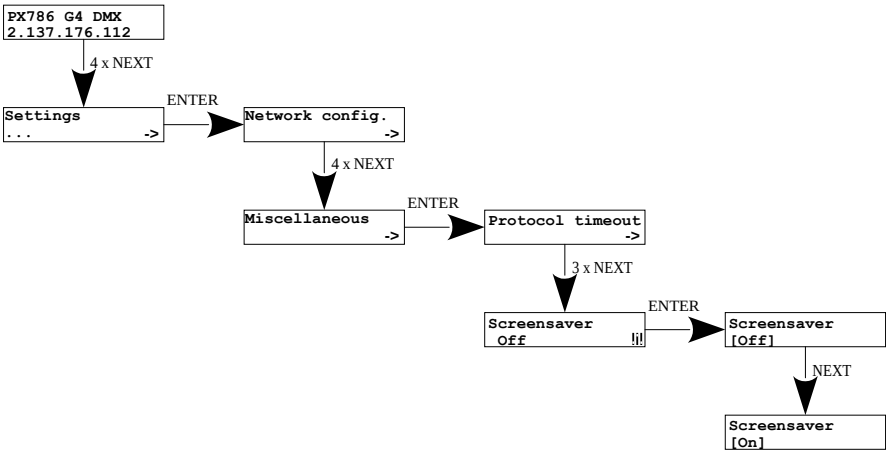

4.9 Setting the display contrast

If the device has a problem with the readability of messages displayed on the screen, it is possible to change its settings. To do this, press the ~10x *Esc* button. The contrast can be set in range from 1 to 64. If the screen is illegible and only "▓" characters are visible or the screen is completely white, after pressing the ~10x *Esc* button, the device will signal being in the ***Contrast*** menu by flashing the DMX signal diodes alternately in blue and orange.

With the *Next* or *Previous* button, the appropriate value should be search blindly (it is recommended to press *Next* button to find the value in which the screen becomes readable, and then use the *Next* and *Previous* keys to adjust the value to suit your needs). To exit the ***Contrast*** menu, press the *Enter* key and accept the selected value.

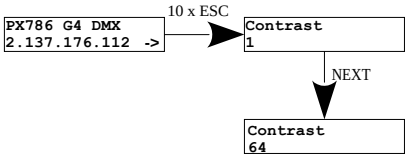

5 Indicator lights

The indicators diodes on the front panel of the gate provide information on the status of the unit: the four LEDs are bi-color ones (blue – orange) and communicate the status of DMX. Each diode is assigned to one of the four DMX ports.

Action	Function
blinking blue (every ~1s)	DMX transmission through the port concerned
blinking blue (every ~3s)	hold the last value *Stop DMX signal – On*
blinking blue (every ~0.5s)	transmission using merging (i.e. output data are a result of combining data from two Art-Net sources)

The above information refers to the so-called normal operating mode.

Additional information communicated by the LED indicators:

- if the screen saver mode is enabled or an “Art-Net Mute Indicators” command has been received, all the diodes ***go out***,
- if the gate receives an “Art-Net Indicate” command, all the diodes start **blinking**
- if Art-Net / sACN packets stop being received by a given port, then, depending on the ***Protocol Timeout*** option:
    - if ***Stop DMX signal*** is ***Off*** the port will continue to send the last values and the diode will continue to ***blink in blue***,
    - if ***Stop DMX signal*** is ***On*** transmission through the port will stop and the diode ***will go out***,

Two single-color diodes at the bottom:

- the yellow one communicates receiving or sending a network packet
- the green one communicates the status of the Ethernet network, if the diodes emits continuous light, the network is connected, if the diode is not emitting light, there is no access to the network

6 Art-Net commands

List of Art-Net commands supported in PX786

Name	Value
OpPoll	0x2000
OpPollReply	0x2100
OpOutput / OpDmx	0x5000
OpSync	0x5200
OpAddress	0x6000
OpFirmwareMaster	0xf200
OpFirmwareReply	0xf300

"Art-Net™ Designed by and Copyright Artistic Licence Holdings Ltd"

7 Upgrade

In order to update the gate firmware, use the program DMX-Workshop, which is available on the Artistic Licence website:

http://www.artisticlicence.com

Firmware updates are available on the manufacturer's website.



1. In the main menu field select the option ***Node List***.
2. In the field ***Active Art-Net Nodes*** select the device to which you want to upload the update.
3. Right-click the device chosen, selecting in this sequence: ***Advanced*** → ***Programme Upload*** → ***Firmware***.
4. Using the "magnifying glass" button located to the right of the update access path, download the file with **.alf* extension.
5. In the ***Compatible Devices*** field select again the device to update
6. In order to upload the update, press the button ***Upload new Firmware***.

NOTE! To update the device software, you must disable all Art-Net and sACN control signals in the network.

NOTE! When installing new software, problems may arise due to the Windows® firewall settings. One of the solutions is to completely disable the system firewall for the time of uploading the new firmware version. The second is to add the DMX-Workshop program to the exceptions in the firewall giving all permissions without having to completely disable the firewall (screen below).

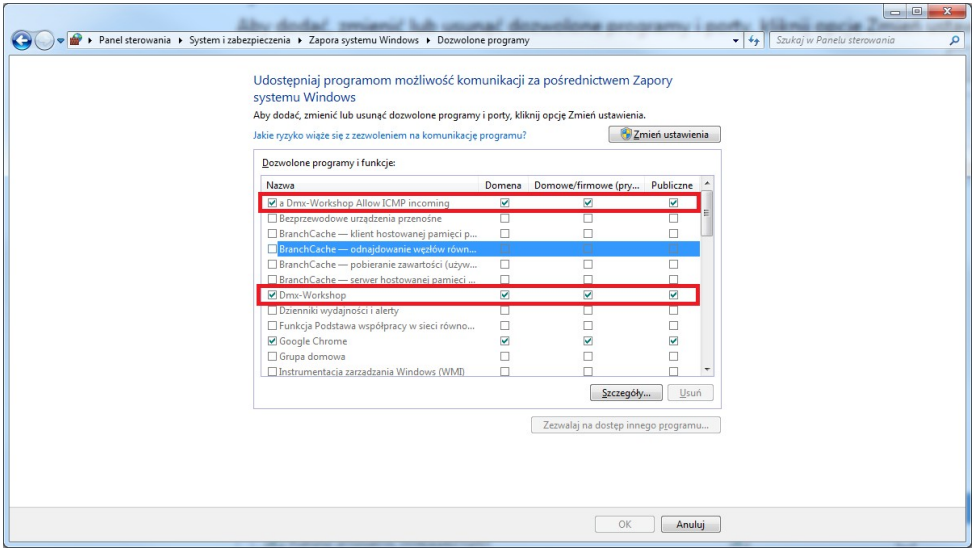

8 Connection scheme

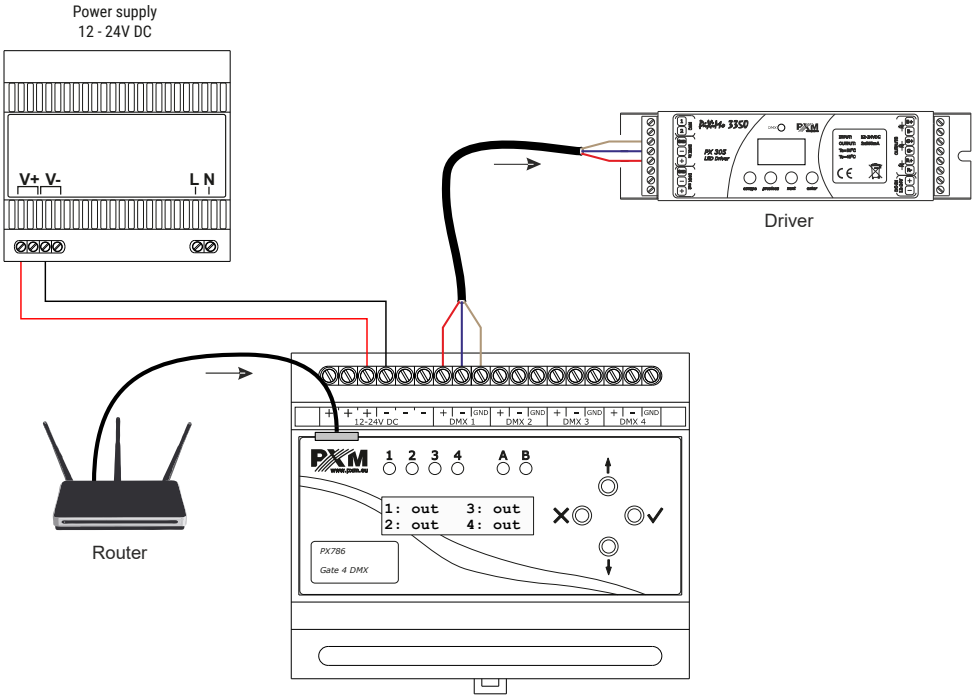

9 Dimensions

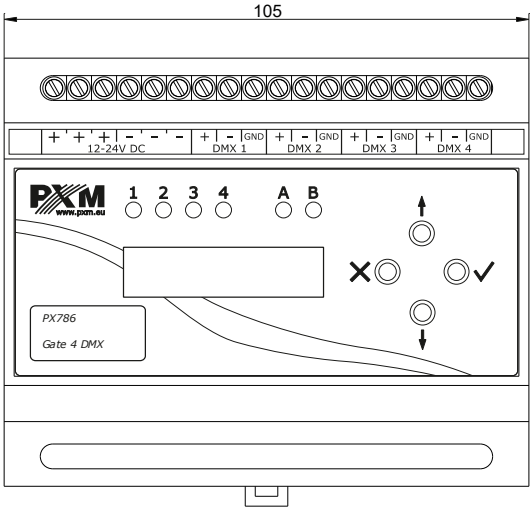

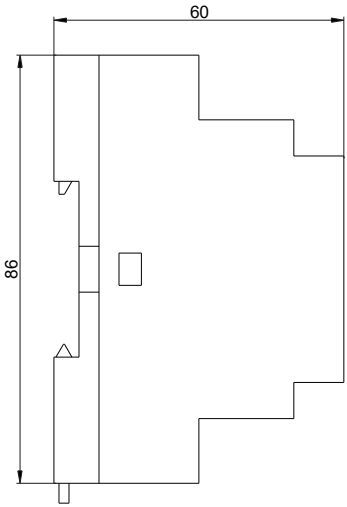

10 Technical data

type	PX786
DMX lines	4
DMX input	screw terminals
optical DMX line isolation	yes
galvanic isolation of DMX lines	yes
DHCP protocol support	yes
Art-Net version	Art-Net 1, 2, 3, 4
communication method	Art-Net / sACN, display and buttons
firmware update	through Art-Net 4 protocol
number of user configurations	1
default user presets	2 (2.x.x.x and 10.x.x.x)
indications mode	Normal, Mute, Identify
“No signal Art-Net” mode	yes (holding last value)
synchronous mode support	yes
dark mode (screensaver)	yes
user interface	2 x 16 LCD display, 4 x buttons, 4 bi-color diodes, 2 single-color diodes
power supply	12 – 24V DC
power consumption	max. 4W
weight	0.2kg
dimensions	width: 105mm (6 DIN rail modules) height: 86mm depth: 60mm

Podłęże, 26.10.2021

DECLARATION OF CONFORMITY

PXM Marek Żupnik spółka komandytowa
Podłęże 654, 32-003 Podłęże

we declare that our product:

Product name:	Gate 4 DMX
Product code:	PX786

meets the requirements of the following standards, as well as harmonised standards:

PN-EN IEC 63000:2019-01	EN IEC 63000:2018
PN-EN 61000-4-2:2011	EN 61000-4-2:2009
PN-EN IEC 61000-6-1:2019-03	EN IEC 61000-6-1:2019
PN-EN IEC 61000-6-3:2021-08	EN IEC 61000-6-3:2021

and meets the essential requirements of the following directives:

2011/65/UE DIRECTIVE OF THE EUROPEAN PARLIAMENT AND OF THE COUNCIL of 8 June 2011 on the restriction of the use of certain hazardous substances in electrical and electronic equipment
Text with EEA relevance.

2014/30/UE DIRECTIVE OF THE EUROPEAN PARLIAMENT AND OF THE COUNCIL of 26 February 2014 on the harmonisation of the laws of the Member States relating to electromagnetic compatibility (recast)
Text with EEA relevance.

PXM
Marek Żupnik spółka komandytowa
32-003 Podłęże, Podłęże 654
NIP 677-002-54-53



mgr inż. Marek Żupnik.