PX789

Driver LED C.C.

1 x 2300mA

User manual

Table of Contents

1 Description....3
2 Safety conditions....4
3 Connectors and control elements....5
4 Indication light....5
5 Cooperation with the PX277 configurator....6
6 Programming the device....7
6.1 Description of information parameters....7
6.2 DMX address....7
6.3 No Signal function....8
6.4 Smooth....9
6.5 Output current....9
6.6 Offset parameter....11
6.7 Temperature limit....12
6.8 Restoring factory settings....13
7 DMX signal connecting....14
8 Connection scheme....15
9 Dimensions....16
10 Technical data....17

Manufacturer reserves the right to make modifications in order to improve device operation.

PXM Marek Żupnik sp.k.
Podłęże 654
32-003 Podłęże
BDO register number 000005972

tel. +48 12 385 83 06
mail: info@pxm.pl
www.pxm.pl

Rev.1-0
16.06.2020

1 Description

The PX789 driver is designed to control LEDs. It can be powered with 24 – 60V DC and has a maximum current carrying capacity of 2.3A. It is possible to set the current (600 – 2300mA) of the output driver in accordance with the parameters of the LED receivers. In addition, an option has been implemented in the driver to accurately calibrate the output current. It should be remembered that the driver supply voltage must be at least 3V higher than the voltage of LED receivers.

PX789 can be controlled by DMX signal (the device has a built-in DMX512 signal receiver) as well as operate independently. The DMX address and other device settings are configured using PX277 (PxArt+ Settings Controller) or RDM protocol. The user has the option of configuring the behavior of the device in the event of loss of the DMX control signal. The driver works in full analog range, despite the fact that interpolated resolution of the output control is 16 bit.

The driver has also implemented the *Offset* parameter, which allows to eliminate or reduce the lamp switching on threshold.

2 Safety conditions

PX789 is a device powered with safe voltage of 24 – 60V DC; however, during its installation and use the following rules must be strictly observed:

1. The device may only be connected to 24 – 60V DC with current-carrying capacity compatible with technical data.
2. All the conductors should be protected against mechanical and thermal damage.
3. In the event of damaging any conductor, it should be replaced with a conductor of the same technical data.
4. Connection of DMX signal can only be made with shielded conductor.
5. All repairs and connections of outputs or DMX signal can only be made with cut off power supply.
6. The PX789 should be strictly protected against contact with water and other liquids.
7. All sudden shocks, particularly dropping, should be avoided.
8. The device cannot be turned on in places with humidity exceeding 90%.
9. The device cannot be used in places with temperature lower than +2°C or higher than +40°C.
10. Clean with damp duster only.

3 Connectors and control elements

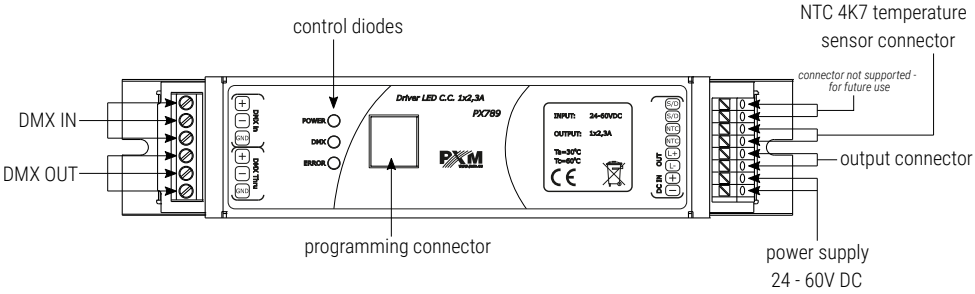

4 Indication light

The driver is equipped with 3 indicator lights:

Indicator	Action	Function
green ● *Power*	permanent light	the device is working properly
blue ● *DMX*	permanent light	receiving DMX signal
red ● *Error*	permanent light	temperature exceeded
	fast flashing	temperature sensor error

5 Cooperation with the PX277 configurator

It is possible to modify driver settings by connecting the driver to a PX277 PxArt+ Settings Controller.

When the PX277 starts up, its name and software version will appear on the display for a short time. The main menu allows to preview many of the driver parameters and adjust the following options: DMX address, smoothing, output current, No Signal mode, Output Offset and factory reset.

PxArt+ Settings Controller also features an option allowing to check driver software version number, driver serial number and model.

Navigation through the menu is possible with programmer buttons located below the display. The *escape* button allows an exit to the upper level in the device menu; *next* and *previous* buttons make it possible to go forward and backward (alternatively value decreasing or increasing). However, the *enter* button allows to enter the edition of the selected menu or confirmation of the selected value.

6 Programming the device

6.1 Description of information parameters

Using PX277 controller, it is possible to access important information about driver to which the former is connected. channel status, model, operating mode, version of the installed software in PX789 and driver serial number.

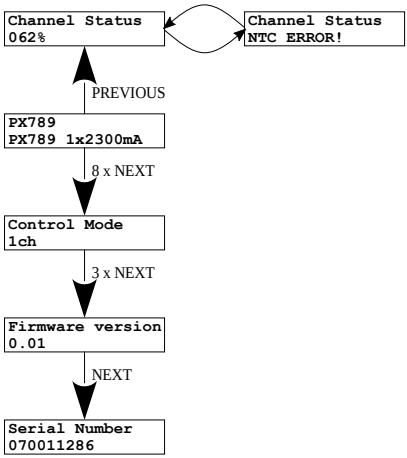

6.2 DMX address

PX277 allows to change the driver's DMX address. The DMX channel can be set in the range from 1 to 512.

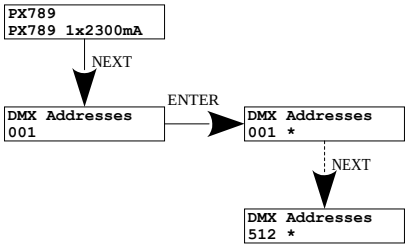

6.3 No Signal function

In the **[No Signal]** menu it is possible to configure the response of the device if the DMX signal is interrupted.

Possible options to choose from:

- *Off* – total output deactivation,
- *On* – activating the output at 100%,
- *Scene* – setting the output brightness in the range of 0 – 255,
- *Hold* – holding the last value before DMX signal disappearance.

An additional parameter set in the 0 – 10s range is **[No Signal Time]**. This is the time when the option selected from the **[No Signal]** menu will be activated.

If you connect a DMX signal, the option being executed will automatically stop and the driver will start operation in accordance with the control signal parameters.

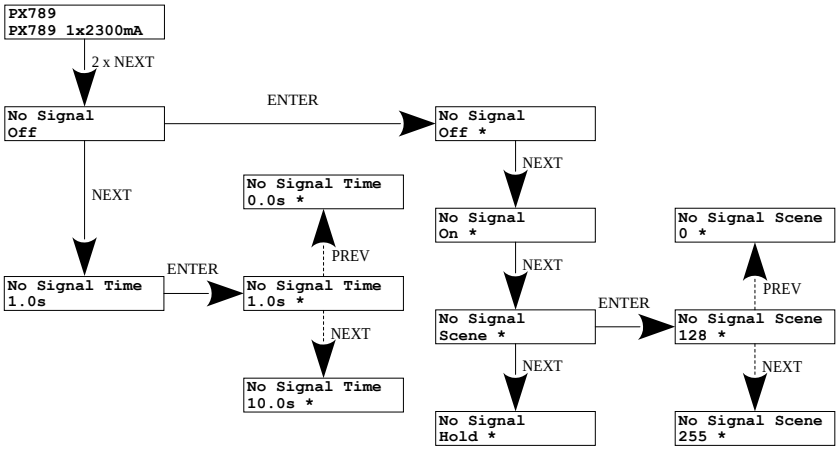

6.4 Smooth

The device also has a smoothing capability. Smoothing allows for smooth changes in brightness, without visible jerks, which prevents light vibration effects in lighting installations. By default, this option is enabled at level 3 – **[Level 3]**, to change the smoothing level or turn it off completely, use the PX277 programmer to select the **[Smooth]** option. The following options are available:

- **Off** – smoothing off,
- **Level 1 – 4** – smoothing level adjustable from 1 to 4 (1 – fast, 4 – very smooth).

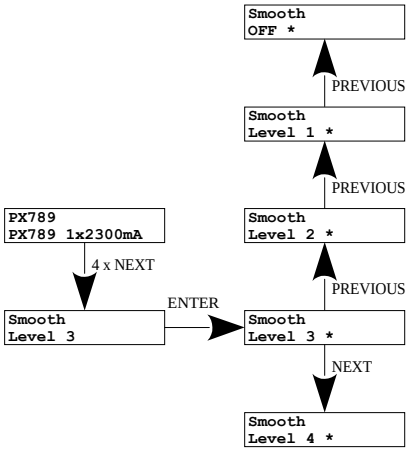

6.5 Output current

In PX789, the user can specify what current will be at the driver output – suitably adapted to the LED receiver. The following ranges can be set:

600 – 700mA	1200 – 1300mA	1800 – 1900mA
700 – 800mA	1300 – 1400mA	1900 – 2000mA
800 – 900mA	1400 – 1500mA	2000 – 2100mA
900 – 1000mA	1500 – 1600mA	2100 – 2200mA
1000 – 1100mA	1600 – 1700mA	2200 – 2300mA
1100 – 1200mA	1700 – 1800mA	

In addition, the output current can be set very precisely using the **[Curr. Calibration]**, which can be set between -100 and +100.

For the 700 – 800mA range, the parameter **[Curr. Calibration]** with the value +100 will accept the current output value ~800mA. However, in the case of the 800 – 900mA range, the **[Curr. Calibration]** with the value -100 will also set the output current to ~800mA.

NOTE! Use the meter to accurately calibrate the output current.

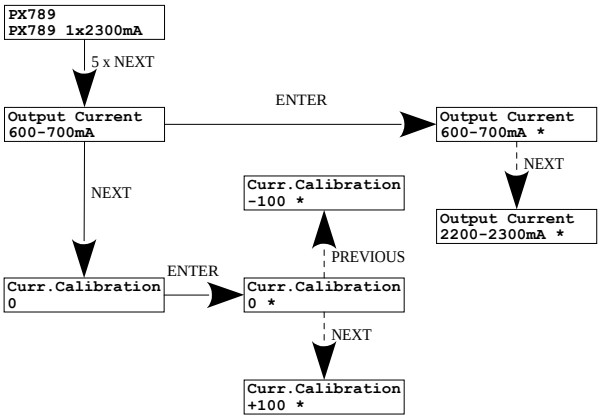

The chart below shows the ***schematic*** operation of the calibration option on the example for the ranges 700 – 800mA and 800 – 900mA.

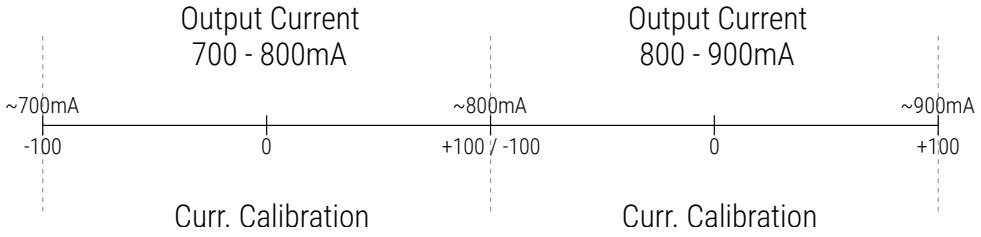

6.6 Offset parameter

The [Output Offset] parameter has been implemented in the device so that the LED receiver can shine already at the DMX 1 value. The setting is useful when the LED characteristics allow it to be lit at a DMX value, e.g. 40. This parameter allows to map the effective range of DMX values, for a given receiver, to the full range of DMX values 0 – 255. This parameter is set in the range of 0 – 500.

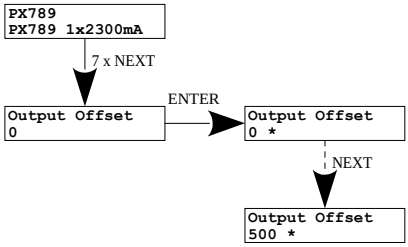

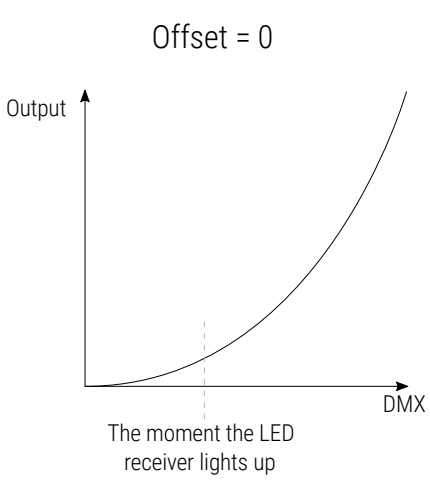

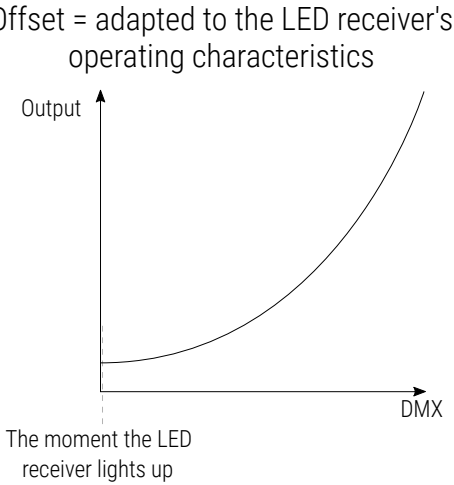

6.7 Temperature limit

The driver is factory fitted with a temperature sensor, in addition it is possible to connect an external NTC 4K7 thermistor.

After exceeding +80°C the driver will start to limit the output power. After exceeding +90°C it will start operating with a maximum power of 10%.

The external sensor works very similarly to the sensor in the driver, but the power reduction is already at +75°C and is also linear to 10% at +90°C.

Any sensor error (no NTC, shorted) reduces the driver's power to 60%.

Operation characteristics of the sensor embedded in the driver

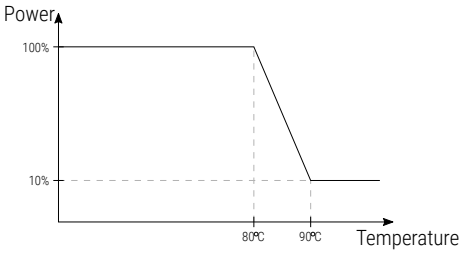

Operating characteristics of the external NTC 4K7 sensor

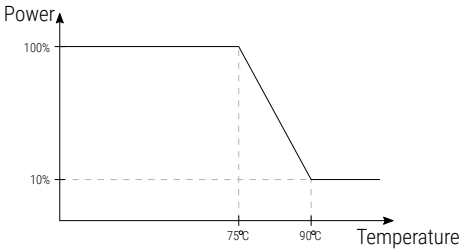

NOTE! After exceeding the upper temperature limit, the driver is not completely turned off, but the power is limited to 10%.

In the device menu it is possible to read the temperature in the driver and on an external sensor. Additionally, if the external sensor is not connected, an error is displayed – you can turn off the sensor.

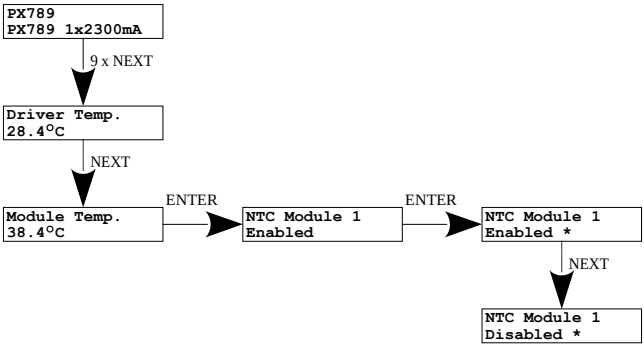

Possible NTC external sensor messages:

- *38.4°C* – temperature read from the sensor,
- *Shrt* – thermistor shorted,
- *MISS* – no sensor connected,
- - - - – external NTC sensor off.

6.8 Restoring factory settings

There is also the option allowing to restore default settings. In order to use this option, select the [Factory Defaults] menu and press *enter* button in PX277. A window will be displayed prompting you press the *previous* and *next* keys at the same time and keep them depressed for two seconds.

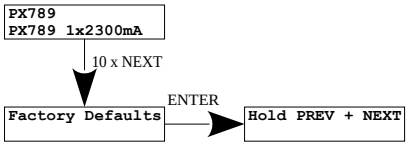

PX789 default settings:

- *DMX Addresses*: 1
- *No signal:* OFF
- *No Signal Time:* 1.0s
- *Smooth:* Level 3
- *Output Current:* 600 – 700mA
- *Curr. Calibration:* 0
- *Output Offset:* 0
- *NTC Module 1:* Enabled

7 DMX signal connecting

PX789 have to be connected to DMX line in serial mode, with no branches on DMX control cable. That means that DMX line, from the signal source, must be connected to ***DMX in*** pins of PX789 and later, directly from ***DMX out*** pins to the next device in DMX chain.

If the PX789 is the last DMX chain receiver there should be terminator (resistor 120 Ohm) mounted between "***+***" and "***-***" pins of ***DMX out*** section.

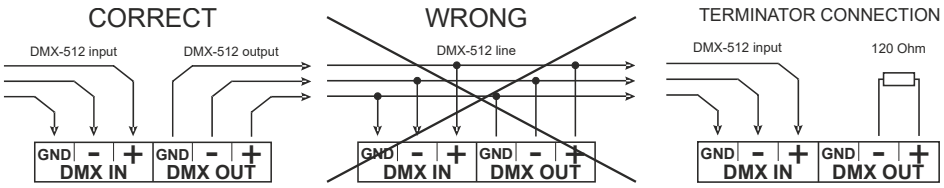

8 Connection scheme

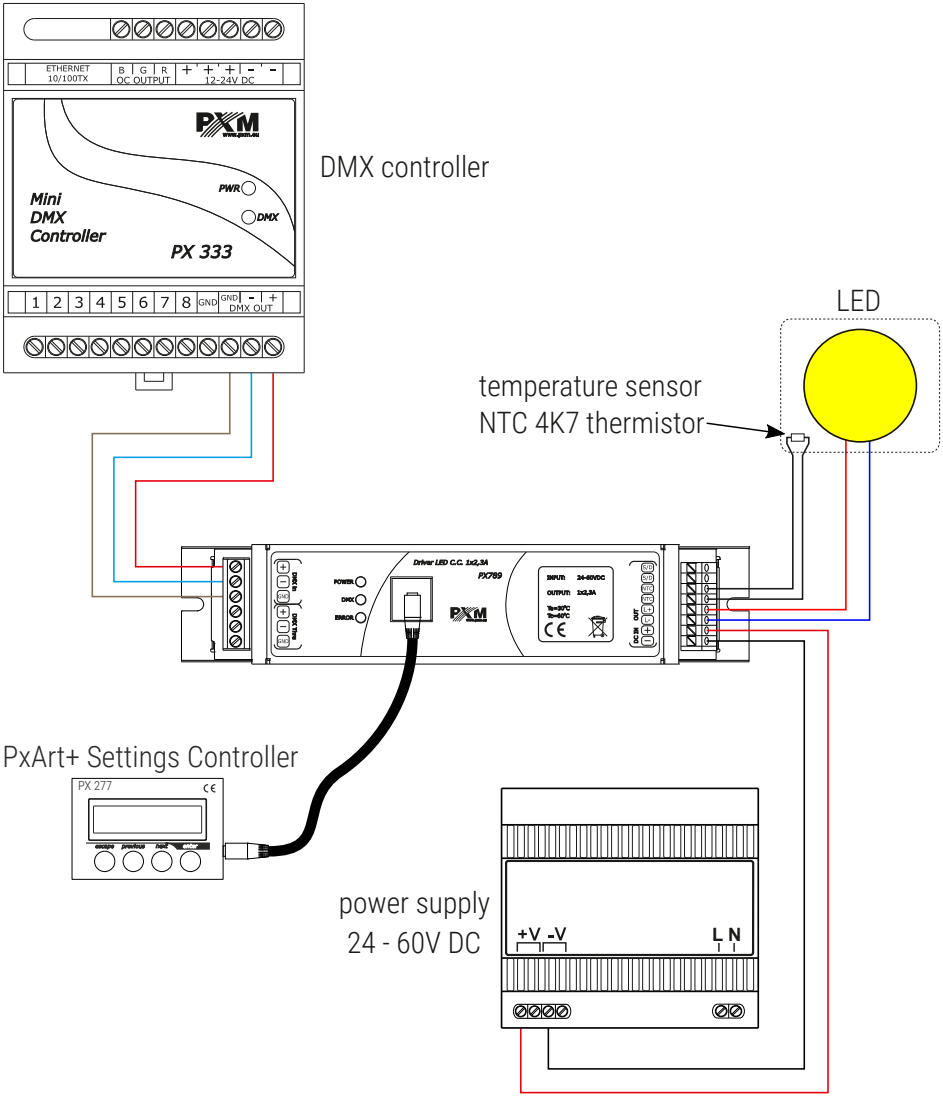

9 Dimensions

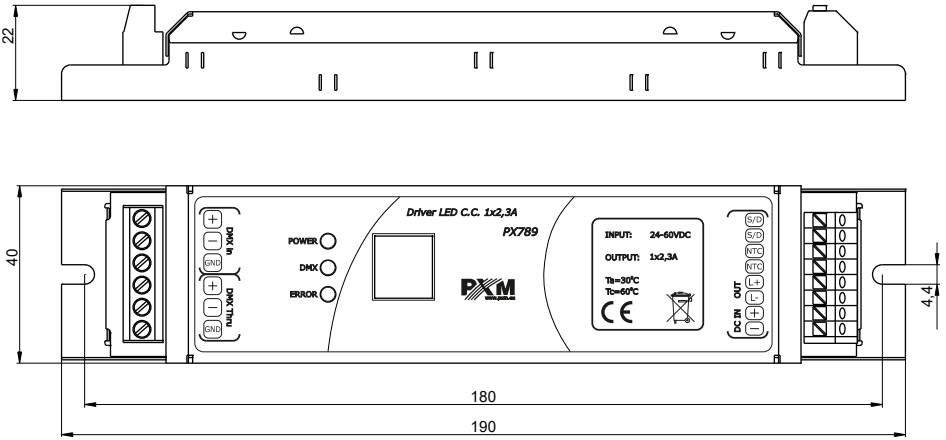

10 Technical data

type	PX789
power supply	24 – 60V DC
DMX channels	512
RDM protocol support	yes
current consumption	max. 2300mA
output load	600 – 2300mA
brightness adjustment range	0.001 – 100%
no-load power consumption	max. 0.5W
number of output channels	1
output sockets	screw terminals / plug connectors
plug connectors	solid wire: 0.2 – 1.5mm^2 stranded wire: 0.2 – 1.5mm^2 stranded wire with ferrule: 0.25 – 1mm^2
weight	0.15kg
dimensions	width: 190mm height: 40mm depth: 22mm

Podłęże, 16.06.2020

DECLARATION OF CONFORMITY

PXM Marek Żupnik spółka komandytowa
Podłęże 654, 32-003 Podłęże

we declare that our product:

Product name:	Driver LED C.C. 1 x 2300mA
Product code:	PX789

meets the requirements of the following standards, as well as harmonised standards:

PN-EN IEC 63000:2019-01	EN IEC 63000:2018
PN-EN 61000-4-2:2011	EN 61000-4-2:2009
PN-EN IEC 61000-6-1:2019-03	EN IEC 61000-6-1:2019
PN-EN 61000-6-3:2008	EN 61000-6-3:2007

and meets the essential requirements of the following directives:

2011/65/UE DIRECTIVE OF THE EUROPEAN PARLIAMENT AND OF THE COUNCIL of 8 June 2011 on the restriction of the use of certain hazardous substances in electrical and electronic equipment
Text with EEA relevance.

2014/30/UE DIRECTIVE OF THE EUROPEAN PARLIAMENT AND OF THE COUNCIL of 26 February 2014 on the harmonisation of the laws of the Member States relating to electromagnetic compatibility (recast)
Text with EEA relevance.

PXM
Marek Żupnik spółka komandytowa
32-003 Podłęże, Podłęże 654
NIP 677-002-54-53



mgr inż. Marek Żupnik.