

DATA SHEET

PX800-C

PxArt+ 06 Ceiling
PxArt+ 12 Ceiling
PxArt+ 18 Ceiling

Device description

PX800-C is a professional LED illuminator designed for illumination of museum exhibitions or displays. Thanks to the application of the most modern semiconductor SSL LED light sources and advanced control electronics, a high class illuminator was created which meets very high requirements for museum and exhibition lighting. Its most important advantages include a complete lack of ultraviolet radiation emission, trace amounts of infrared radiation, a very high factor of CRI color capturing, smooth adjustment of color temperature of emitted light, large brightness and small energy consumption. Modern electronics allowed to create a lamp that is devoid of the effect of "light vibration" (*flicker free* technology) in the full control range, which makes it useful in the television industry.

The device has a bracket that allows it to be mounted directly to the ceiling.

Two individual addresses allocated to each lamp allow for independent adjustment of its brightness and color temperature, regardless of the settings of other lamps. Through push buttons located on the lamp casing it is possible to operate it manually.

Highly-effective LEDs made by Osram Oslon® are used in the lamp with an efficient control system, through which the lamp emits small amounts heat.

The lamp casing renders it possible to change the direction of its beacon in two axes.

Models available

Below is a description of the PX800-C model designations with their explanation:

PX800-C – AA – XX – Z

AA – version:	XX – beam angle	Z – housing colors:
06 – 6 LEDs	10 – 10°	1 – gray
12 – 12 LEDs	20 – 20°	2 – black
18 – 18 LEDs	30 – 30°	3 – white
	40 – 40°	
	EL* – elliptical lenses	
	WW** – Wall Washer	

* - not available for the PX800-C-06 lamp
** - not available for the PX800-C-06 and PX800-C-12 lamp

PxArt+ 06 Ceiling



PxArt+ 12 Ceiling



PxArt+ 18 Ceiling



Technical drawing

PxArt+ 06 Ceiling

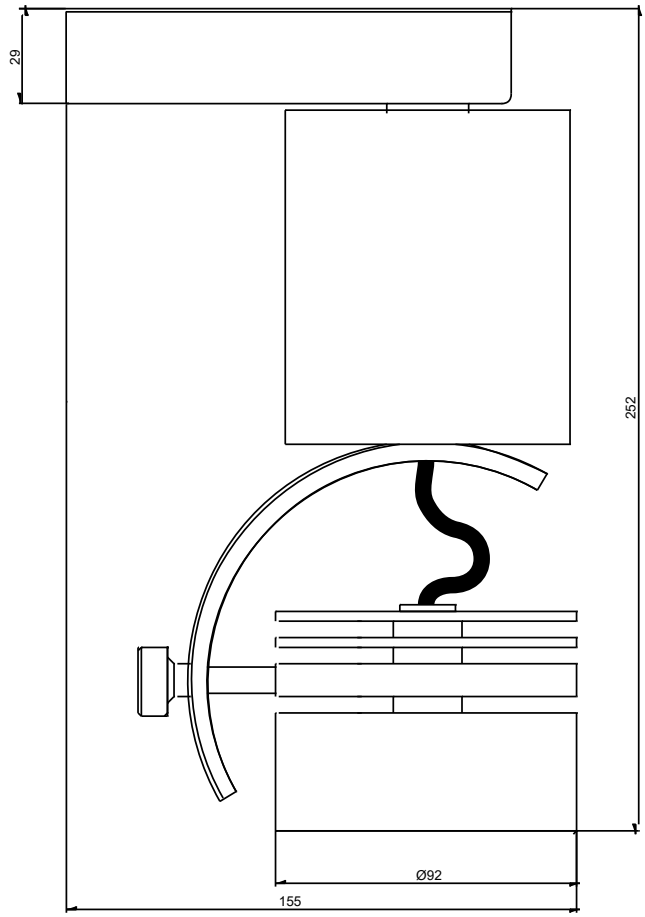

PxArt+ 12 Ceiling

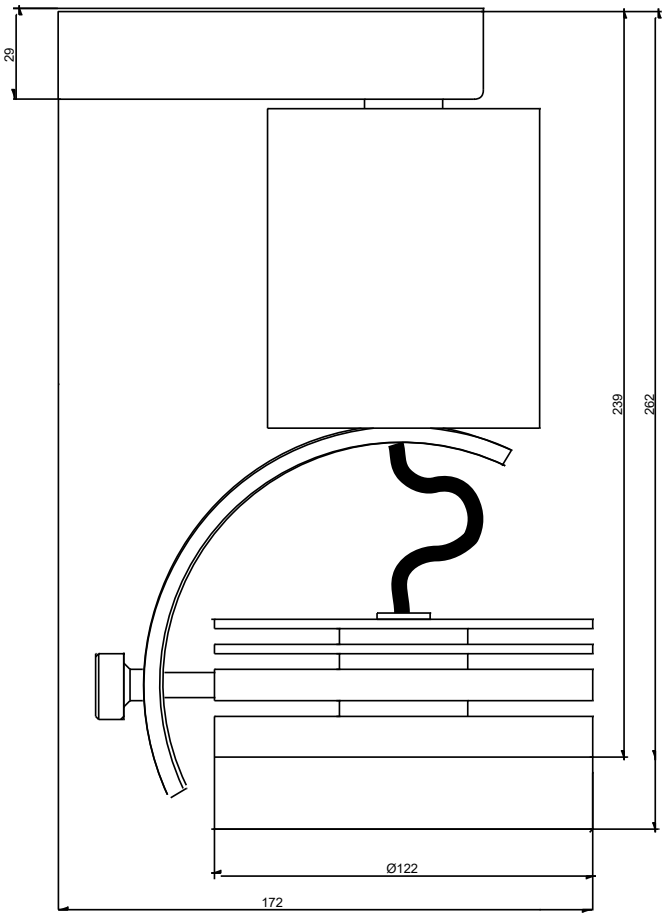

PxArt+ 18 Ceiling

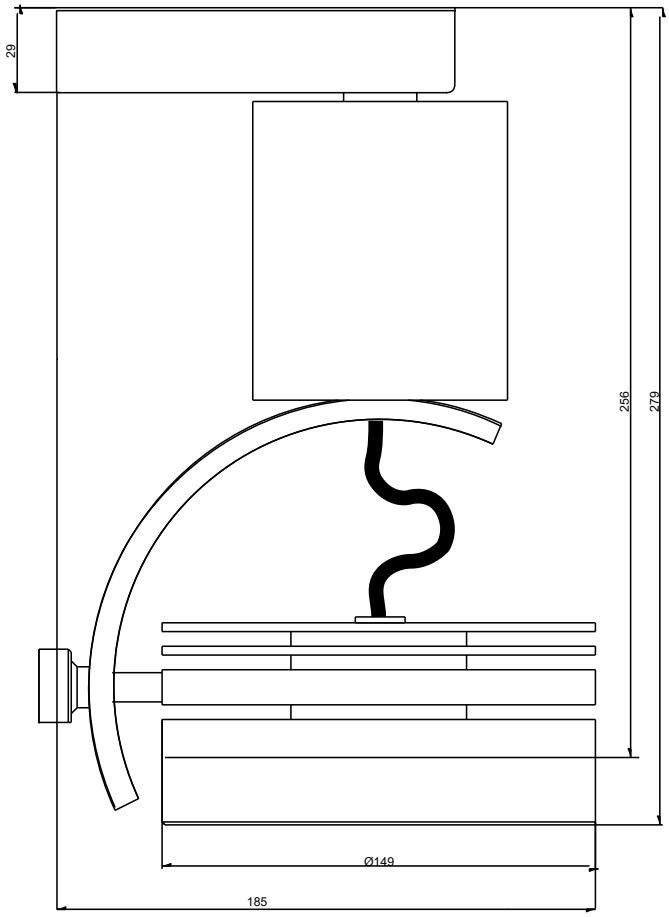

Connection diagram

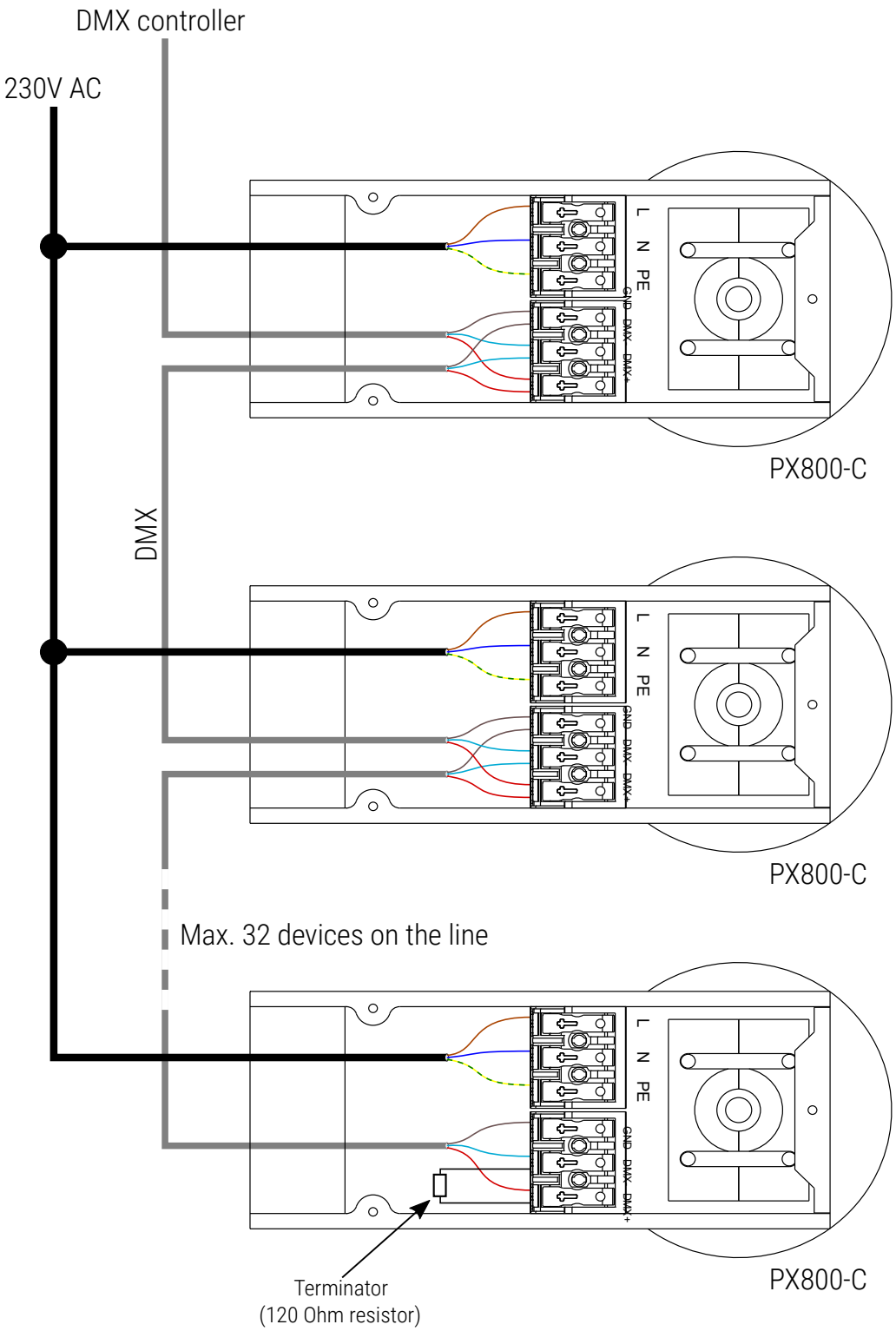

Technical data

type	PX800-C
power supply	230V AC
number of diodes	6 / 12 / 18
power consumption	PX800-C-06: 11W PX800-C-12: 20W PX800-C-18: 25W
max. temperature rise housing	+30°C
LEDs lifespan	50000h
beam angle	10°, 20°, 30°, 40°, EL* (10 x 45°), WW** (50 x 110°)
color temperature	2700 – 5000K
range of brightness adjustment	0 – 100%
CRI index	min. 90
control	DMX, RDM
programmable scenes	1
mounting	to the ceiling
available housing colors	gray, black, white
weight	PX800-C-06: 1.3kg PX800-C-12: 1.7kg PX800-C-18: 2.4kg
dimensions	height PX800-C-06: 252mm diameter PX800-C-06: 92mm height PX800-C-12: 262mm diameter PX800-C-12: 122mm height PX800-C-18: 279mm diameter PX800-C-18: 148mm

* - not available for the PX800-C-06 lamp
** - for a lamp equipped with WW (Wall Washer) optics the look of the reflector differs slightly (dimensions also) – not available for the PX800-C-06 and PX800-C-12 lamp

Lighting parameters

The table below shows the luminous flux of individual lamps and the lenses used in them **[lm]**:

	10°	20°	30°	40°	EL	WW
PX800-C_06	1259	1215	1165	1044	X	X
PX800-C_12	1825	1672	1613	1567	1550	X
PX800-C_18	2509	2453	2373	2187	2089	1940

	PX800-C_06	PX800-C_12	PX800-C_18
10°	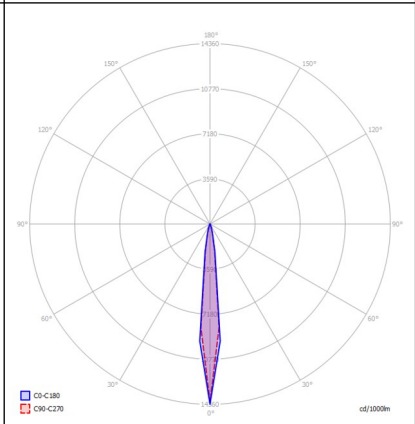	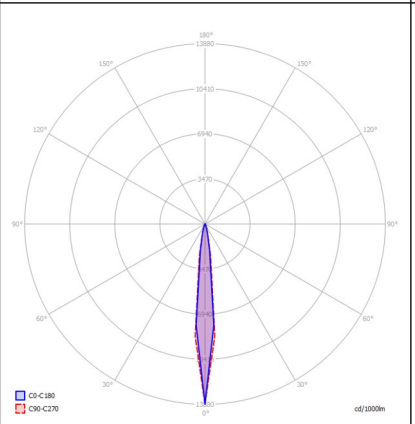	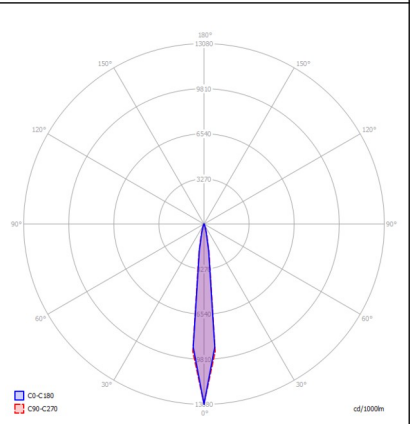
20°	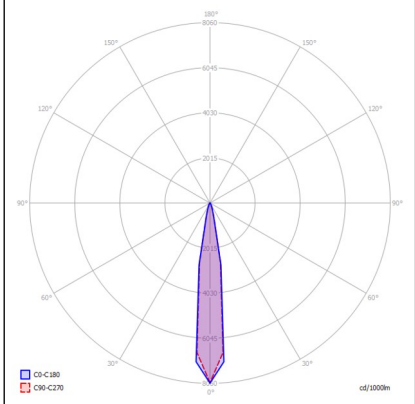	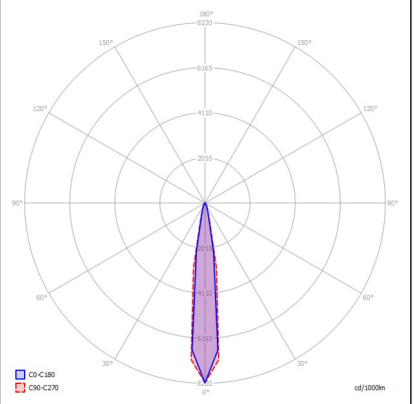	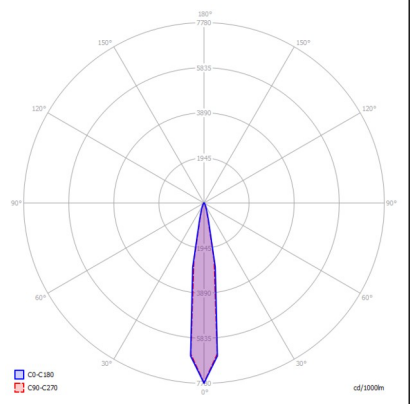
30°	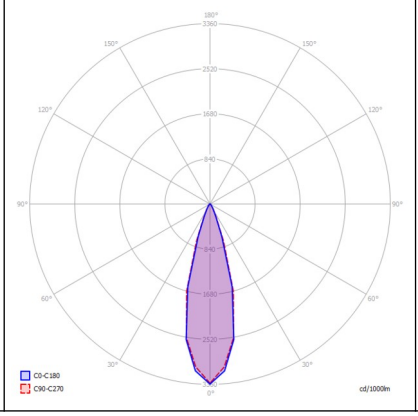	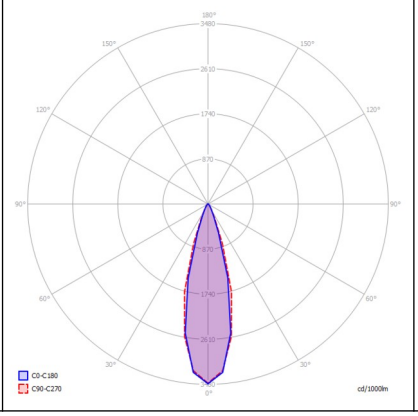	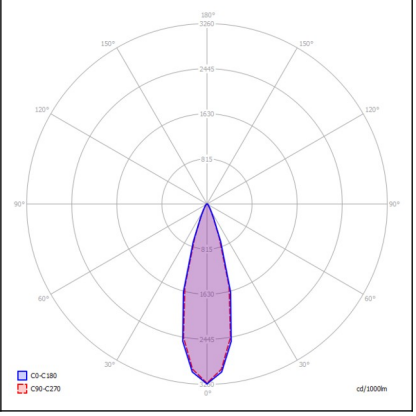

40°	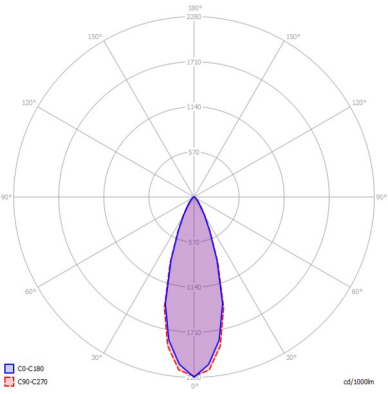C0-C180 C90-C270 cd/1000lm	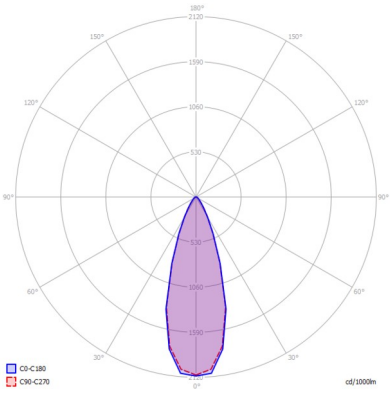C0-C180 C90-C270 cd/1000lm	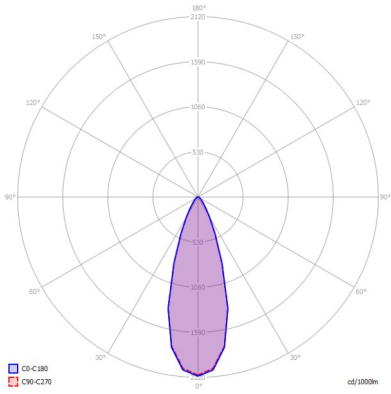C0-C180 C90-C270 cd/1000lm
EL	X	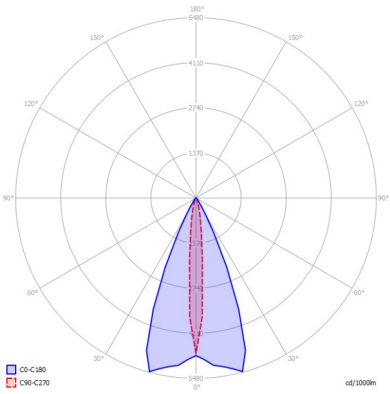C0-C180 C90-C270 cd/1000lm	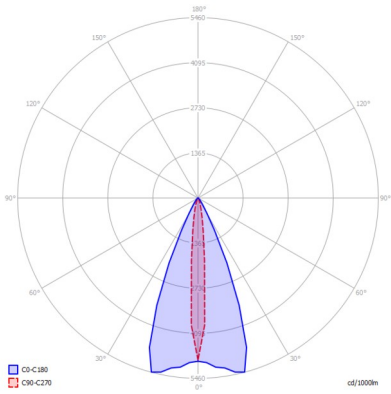C0-C180 C90-C270 cd/1000lm
WW	X	X	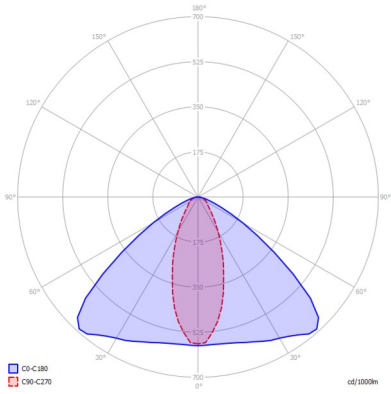C0-C180 C90-C270 cd/1000lm