

DATA SHEET

PX801-W

PxArt+ 06 Mono Wall
PxArt+ 12 Mono Wall
PxArt+ 18 Mono Wall

Device description

PX801-W is a professional LED illuminator designed for illumination of museum exhibitions or displays. Thanks to the application of the most modern semiconductor SSL LED light sources and advanced control electronics, a high class illuminator was created which meets very high requirements for museum and exhibition lighting. Its most important advantages include a complete lack of ultraviolet radiation emission, trace amounts of infrared radiation, a very high factor of CRI color capturing, large brightness and small energy consumption. Modern electronics allowed to create a lamp that is devoid of the effect of "light vibration" (*flicker free* technology) in the full control range, which makes it useful in the television industry.

The device has a handle that allows it to be mounted directly to the wall.

Individual address allocated to each lamp allow for independent adjustment of its brightness, regardless of the settings of other lamps. Through push button located on the lamp casing it is possible to operate it manually.

Highly-effective LEDs made by Osram Oslon® are used in the lamp with an efficient control system, through which the lamp emits small amounts heat.

The lamp casing renders it possible to change the direction of its beacon in two axes.

Models available

Below is a description of the PX801-W model designations with their explanation:

PX801-W – AA – XX – YYY – Z

AA – version:	XX – beam angle	YYY – CRI and color temperature:	Z – housing colors:
06 – 6 LEDs	10 – 10°	927 – CRI 90, temp. 2700K	1 – gray
12 – 12 LEDs	20 – 20°	930 – CRI 90, temp. 3000K	2 – black
18 – 18 LEDs	30 – 30°	940 – CRI 90, temp. 4000K	3 – white
	40 – 40°	950 – CRI 90, temp. 5000K	
	EL* – elliptical lenses	965 – CRI 90, temp. 6500K	
	WW** – Wall Washer		

* - not available for the PX801-W-06 lamp
** - not available for the PX801-W-06 and PX801-W-12 lamp

PxArt+ 06 Mono Wall



PxArt+ 12 Mono Wall



PxArt+ 18 Mono Wall



Technical drawing

PxArt+ 06 Mono Wall

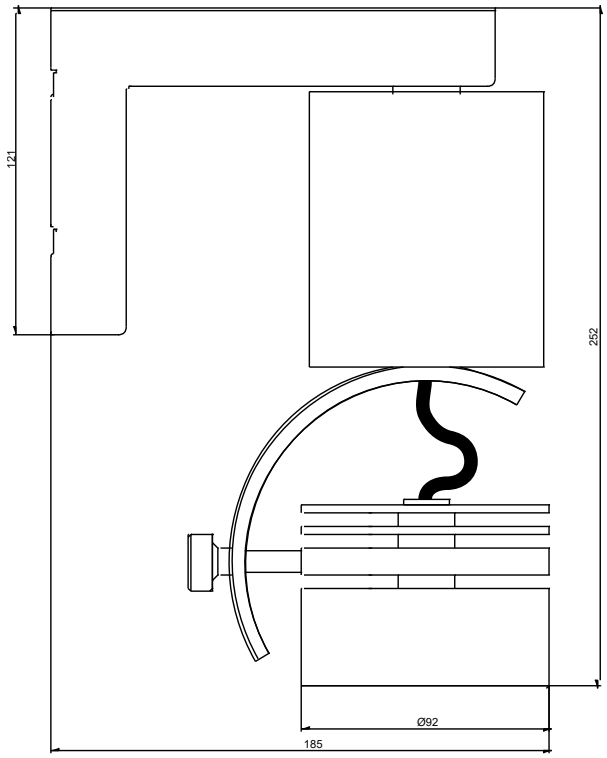

PxArt+ 12 Mono Wall

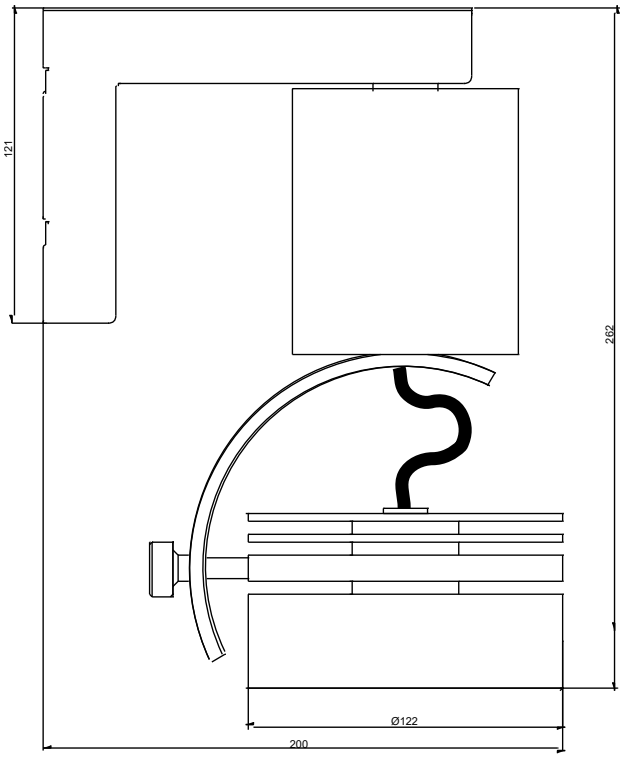

PxArt+ 18 Mono Wall

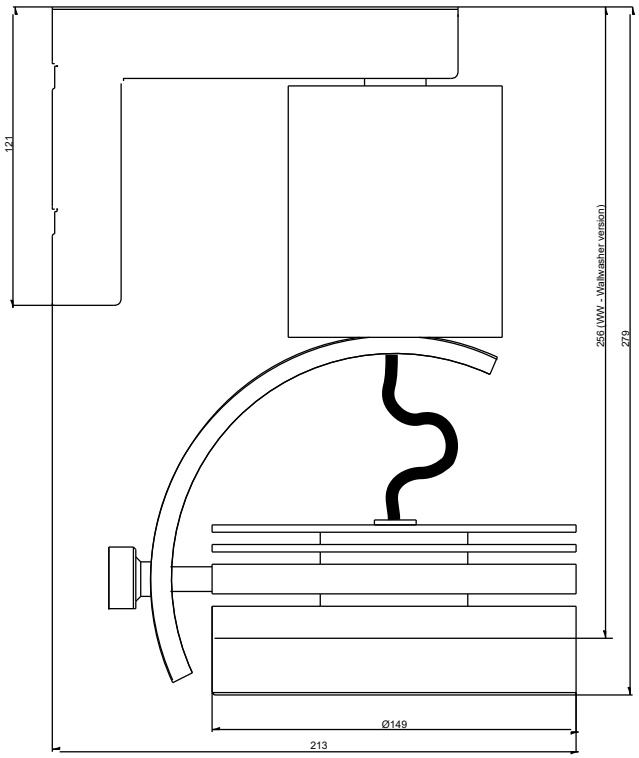

Connection diagram

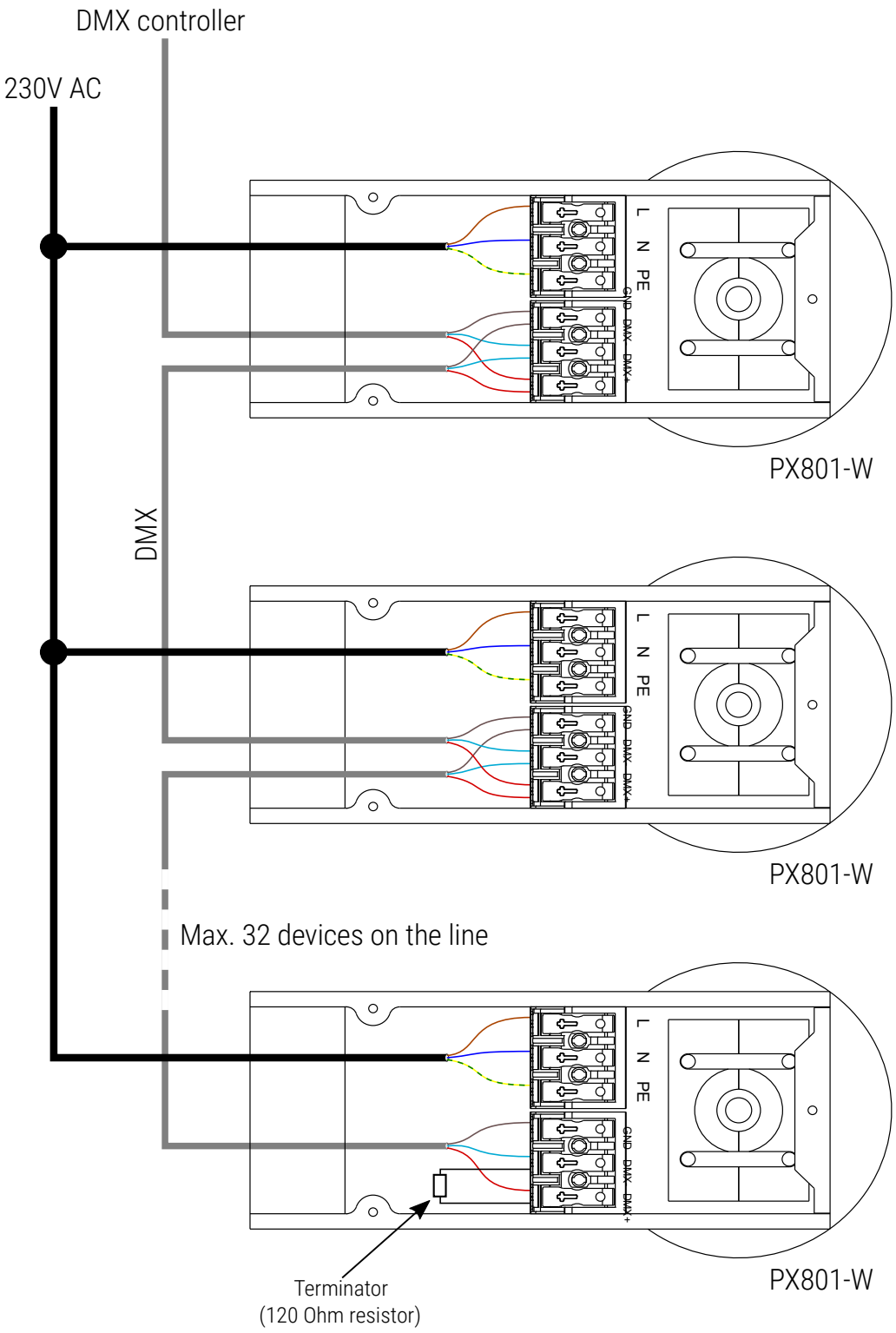

Technical data

type	PX801-W
power supply	230V AC
number of diodes	6 / 12 / 18
power consumption	PX801-W-06: 10W PX801-W-12: 17,5W PX801-W-18: 25W
max. temperature rise housing	+30°C
LEDs lifespan	50000h
beam angle	10°, 20°, 30°, 40°, EL* (10 x 45°), WW** (50 x 110°)
color temperature	2700K, 3000K, 4000K, 5000K, 6500K
range of brightness adjustment	0 – 100%
CRI index	min. 90
control	DMX, RDM
programmable scenes	1
mounting	to the wall
available housing colors	gray, black, white
weight	PX801-W-06: 1.5kg PX801-W-12: 1.9kg PX801-W-18: 2.6kg
dimensions	height PX801-W-06: 252mm diameter PX801-W-06: 92mm height PX801-W-12: 262mm diameter PX801-W-12: 122mm height PX801-W-18: 279mm diameter PX801-W-18: 148mm

* - not available for the PX801-W-06 lamp

** - for a lamp equipped with WW (Wall Washer) optics the look of the reflector differs slightly (dimensions also) – not available for the PX801-W-06 and PX801-W-12 lamp

Lighting parameters

The table below shows the luminous flux of individual lamps and the lenses used in them **[lm]**:

	10°	20°	30°	40°	EL	WW
PX801-W_06	1292	1243	1195	1076	X	X
PX801-W_12	1867	1745	1672	1613	1611	X
PX801-W_18	2625	2578	2475	2282	2185	2038

	PX801-W_06	PX801-W_12	PX801-W_18
10°	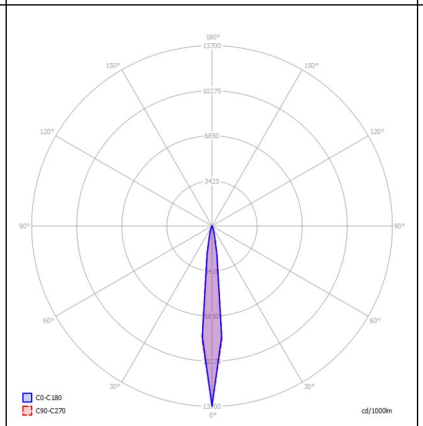	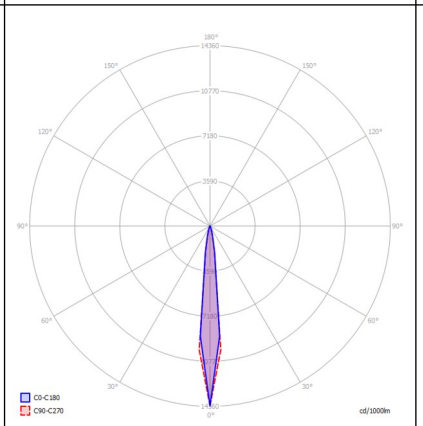	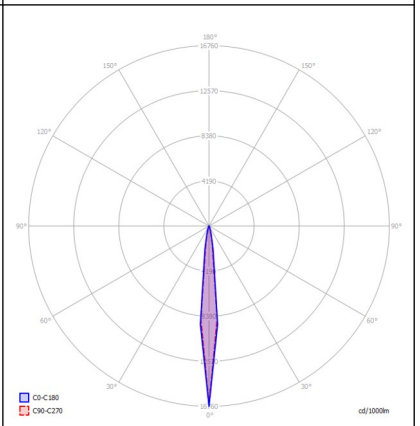
20°	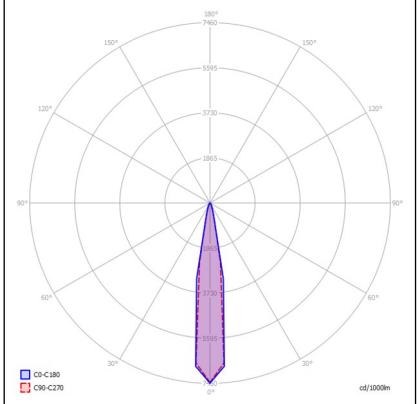	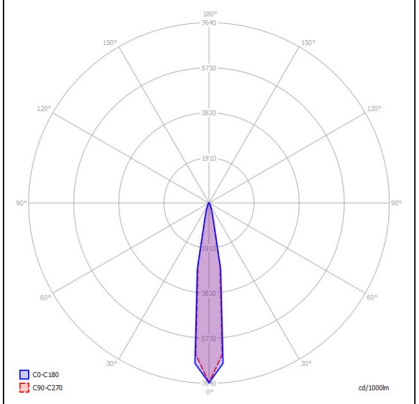	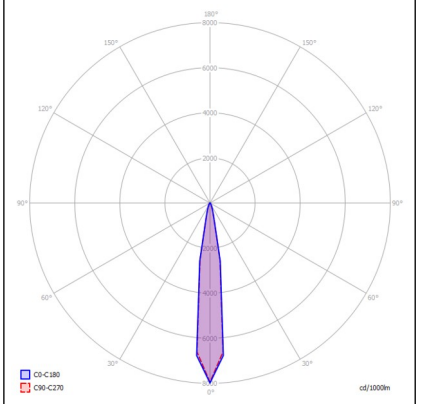
30°	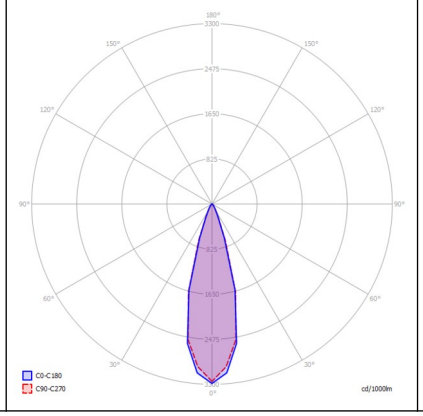	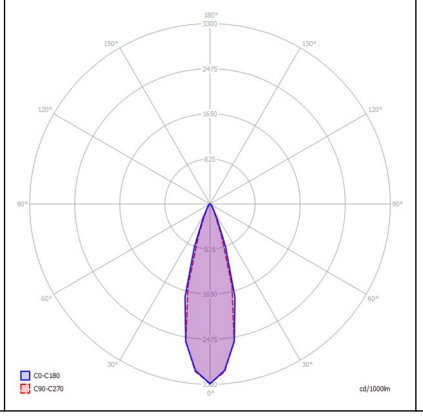	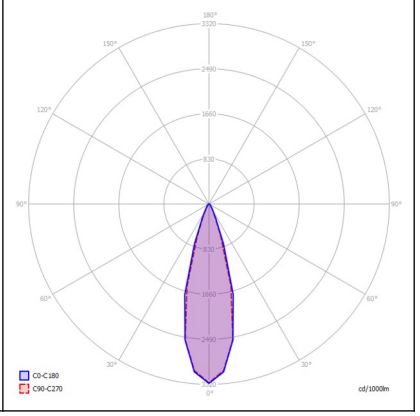

40°	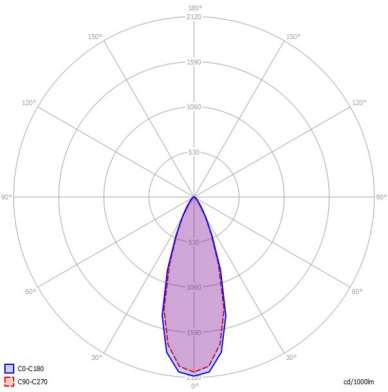	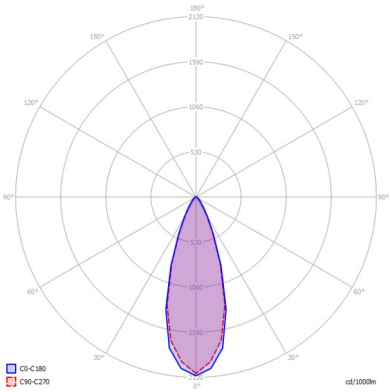	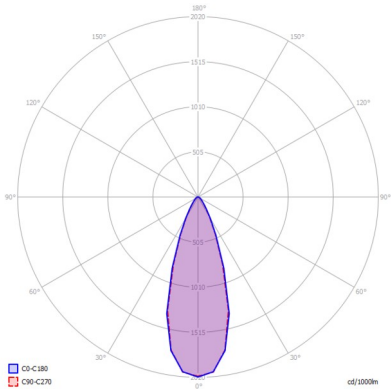
EL	X	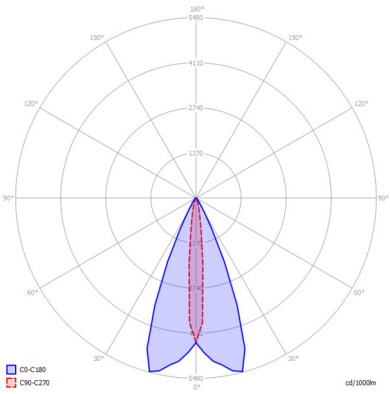	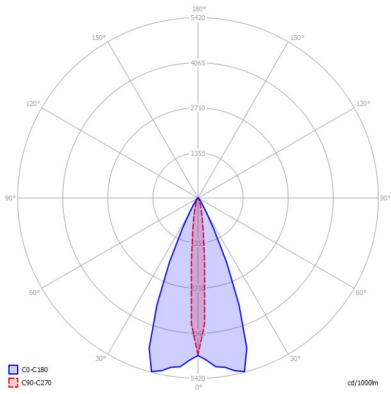
WW	X	X	