# PX810-T

# PxArt+ XL Frame DALI

User manual



# Table of Contents

1 Description....3
2 Safety conditions....4
3 Information on version....6
4 Lamp connection....6
4.1 The cross-section of the GT® Pulse Control....6
5 Installation of shutters....7
6 Connection scheme....10
7 Dimensions....11
8 Technical data....12

*Manufacturer reserves the right to make modifications in order to improve device operation.*

PXM Marek Żupnik sp.k.
Podłęże 654
32-003 Podłęże
BDO register number 000005972

tel. +48 12 385 83 06
mail: info@pxm.pl
www.pxm.pl

Rev.1-0
02.06.2021

# 1 Description

PxArt+ Frame DALI is a professional cropping LED illuminator for the lighting of museums exhibitions or trade fair displays.

The precision cropping system allows to control the luminous flux and adjust the illumination range to the size and position of the displayed object.

Thanks to the application of the latest semiconductor COB type SSL LED light source and advanced control electronics, a high performance illuminator was made, which fulfills very high demands concerning museum exhibition and trade display lighting applications. Its most important advantages include the possibility of precise cropping of the displayed objects, total lack of ultraviolet radiation emission, traces of infrared radiation, very high color rendering index (CRI), and very large brightness at low energy consumption.

The device has a handle that allows it to be mounted to GLOBAL Trac® Pulse Control bus-bars with an integrated power supply and DALI signal receiver. The individual DALI address assigned to each lamp allows you to adjust its brightness, regardless of the settings of the other lamps.

The lamp uses a highly efficient LED diode, thanks to which the lamp emits a small amount of heat.

The lamp housing allows to change the lighting direction in two axes.

# 2 Safety conditions

**Caution! Before installing, connecting and using the lamp you have to absolutely read this document.**

The following symbols are used to underline important information on security on the product and in this manual.



**Danger!**
Risk of loss of life and health



**Warning!**
Fire hazard



**Warning!**
LED light emission, the risk of eye damage



**Warning!**
The risk of burns



**Warning!**
Read the instruction manual

**Caution!**

Do not look at the LEDs, LEDs can cause damage or eye irritation. Do not look at the light source with any optical devices that focus the light rays.



Light is harmful to unprotected eyes, can cause irritation, eye damage or even loss of eyesight.



While working outdoors in normal conditions, the housing unit can heat up to +65°C. Make sure that accidental contact with the device during use is impossible.



In case of improper usage of the product it may cause a risk of serious injury or death because of the threat of fire.

The PX810-T device is powered directly from 230V power grid. Failure to comply with the safety rules may result in electric shock and may endanger the user's life. Therefore it is necessary to observe the following:

1. Installation should be performed by a person holding the appropriate qualifications, according to the instruction manual.
2. The electrical installation to which the lamp is to be connected must meet the safety requirements (the installation must be 3-wire and equipped with a residual current device).
3. All the conductors should be protected against mechanical and thermal damage.
4. In the event of damaging any conductor, it should be replaced with a conductor of the same technical data.
5. All repairs, should be made with cut off power supply.
6. Do not connect to the power supply to device with visible damage.
7. All sudden shocks, particularly dropping, should be avoided.
8. The device cannot be used in places with temperature lower than +2°C or higher than +40°C.
9. Clear with damp cloth only.

# 3 Information on version

The PX810-T lamp is available in several versions that differ.

Below is a description of the PX810-T markings and their explanation:

PX810-T – BB – YYY – Z

| BB – version | YYY – CRI and color temperature: | Z – housing colors: |
|---|---|---|
| XL – large COB | X30 – CRI 95, temp. 3000K | 3 – white |
| | 930 – CRI 90, temp. 3000K | |
| | 950 – CRI 90, temp. 5000K | |
| | 830 – CRI 85, temp. 3000K | |
| | 850 – CRI 85, temp. 5000K | |

# 4 Lamp connection

The PX810-T is a device attached to the GLOBAL Trac® Pulse Control rail using an adapter with a built-in power supply included in the set.

## 4.1 The cross-section of the GT® Pulse Control

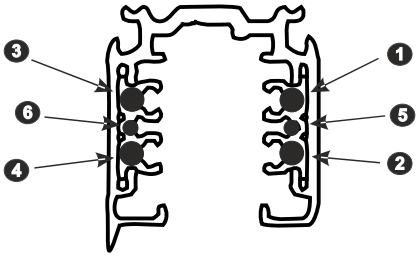


***POWER SUPPLY***

1. phase 2
2. phase 3
3. phase 1
4. neutral

***DALI***

5. DALI A
6. DALI B

# 5 Installation of shutters

First, insert the movable shutters at an angle into the appropriate pockets – visualization below.

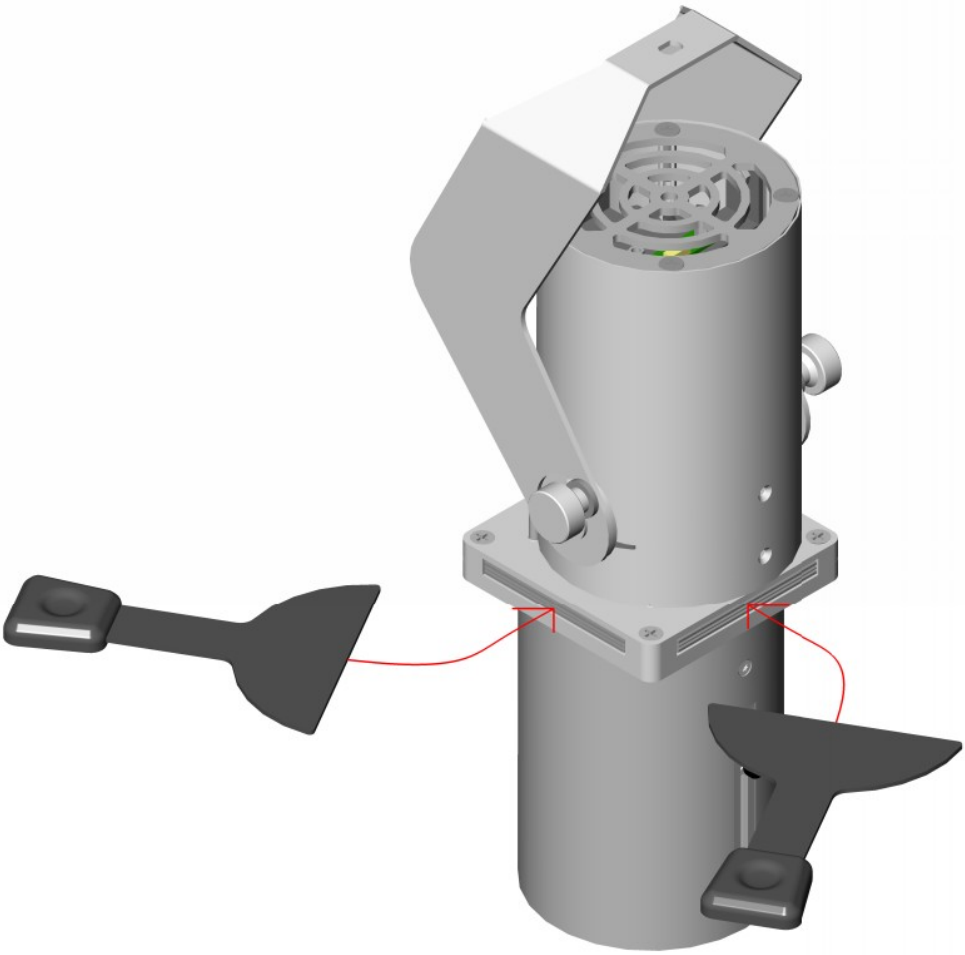

After inserting the diaphragms at an angle, it should be straightened according to the diagram below.

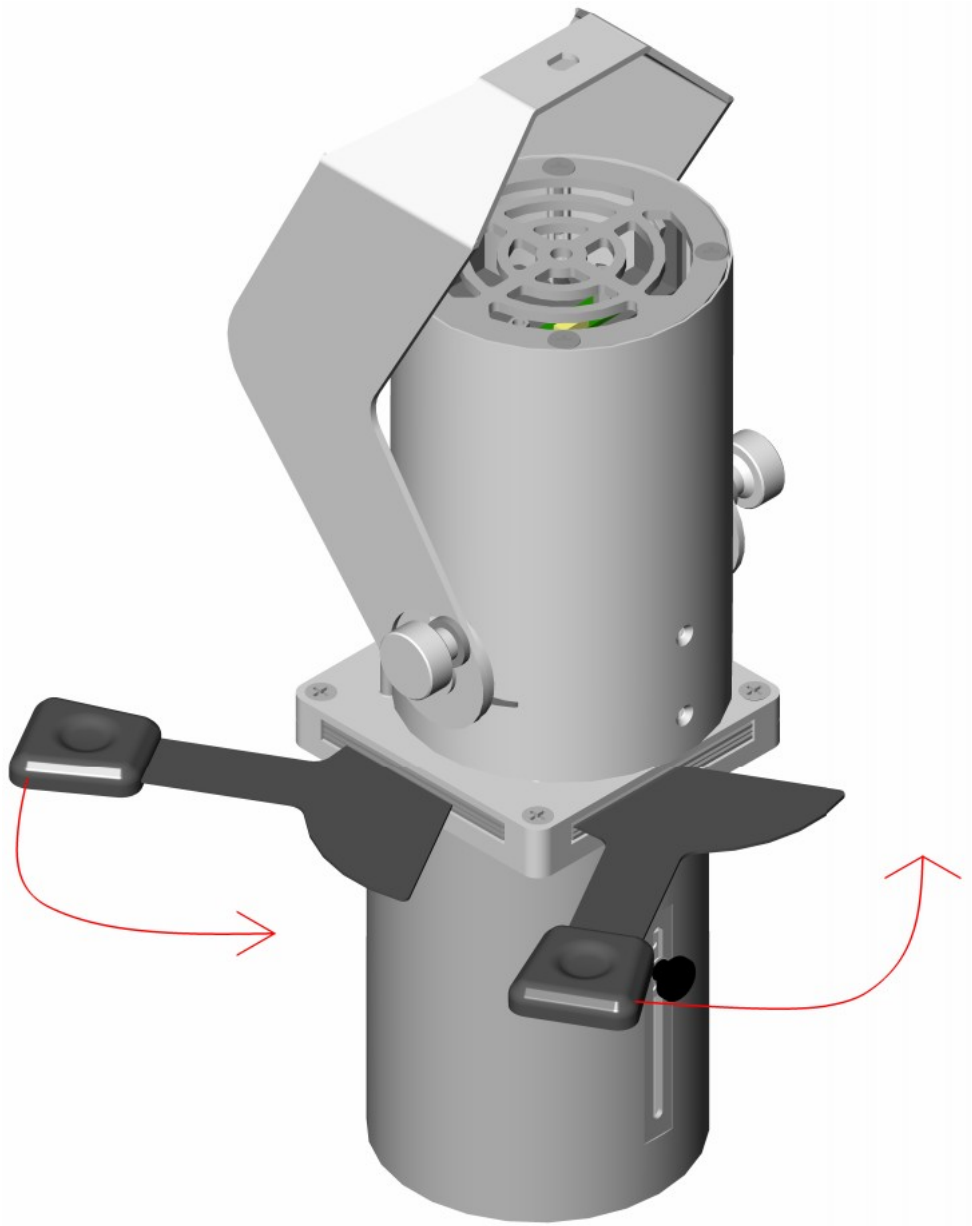

Particular attention should be paid to which pockets are inserted.

Opposite diaphragms must be put in pocket on the same level (upper or lower pocket).

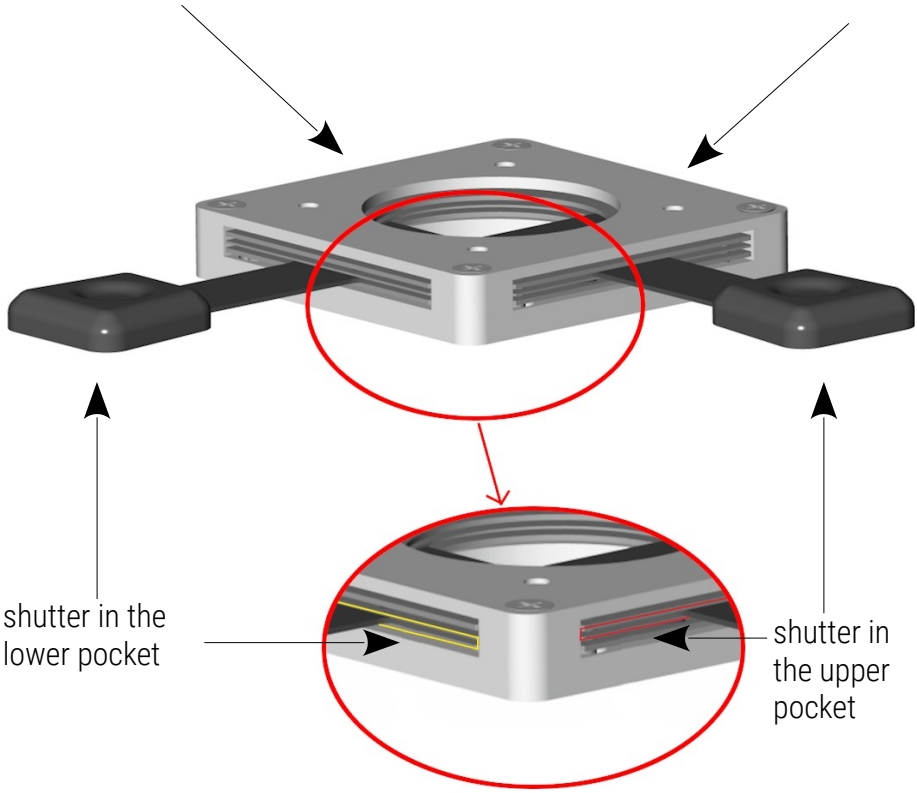

# 6 Connection scheme

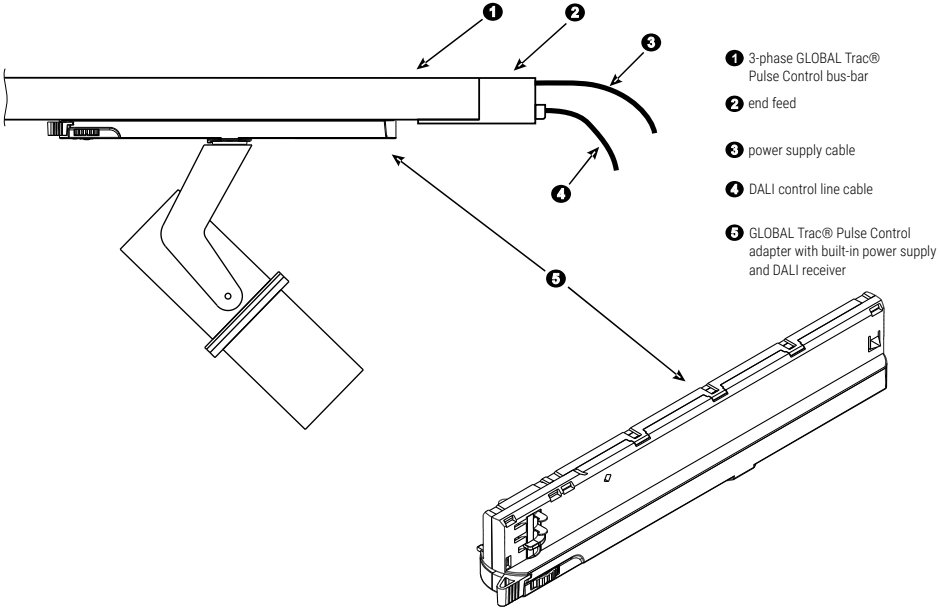


1. 3-phase GLOBAL Trac® Pulse Control bus-bar
2. end feed
3. power supply cable
4. DALI control line cable
5. GLOBAL Trac® Pulse Control adapter with built-in power supply and DALI receiver

# 7 Dimensions

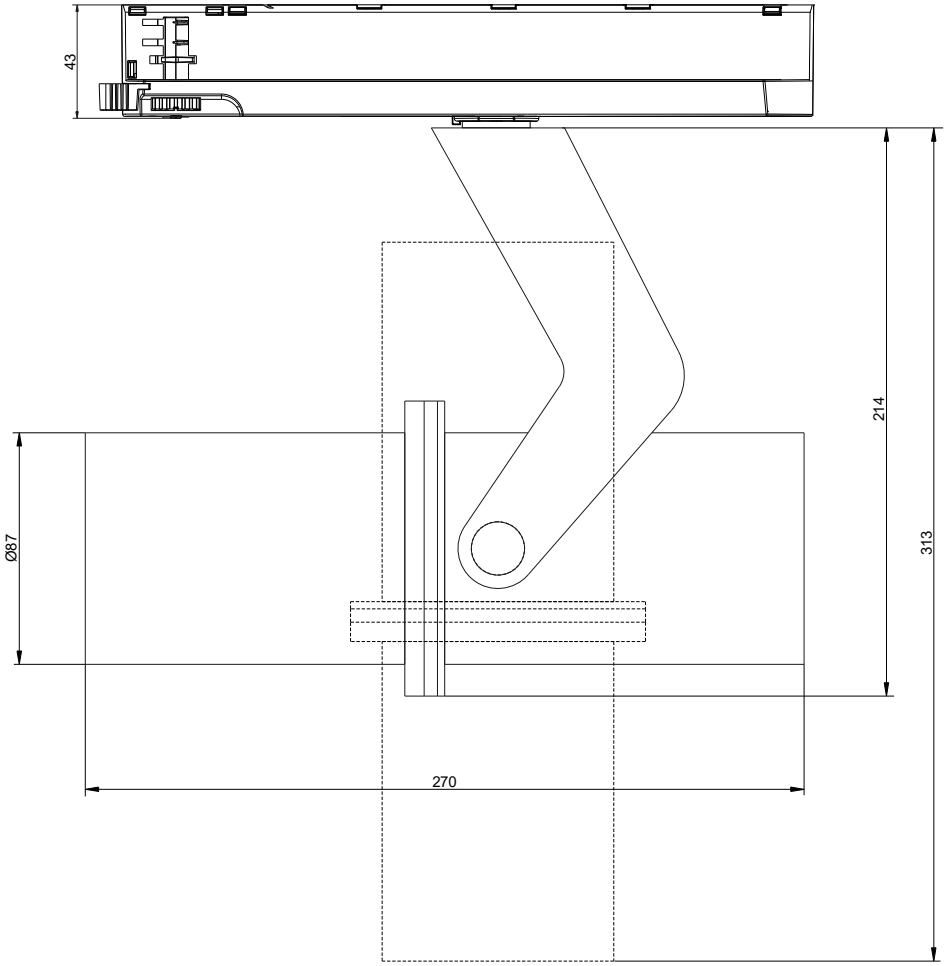

# 8 Technical data

| | |
|---|---|
| type | PX810-T |
| power supply | 230V AC |
| number of LEDs | 1 (COB) |
| power | 27W |
| PF (power factor) | 0.94 |
| total luminous flux | PX810-T_XL_930: 610lm (maximum crop area – square) |
| max. increase of the housing temperature | +50°C |
| color rendering index CRI | min. 80 |
| lifetime of diode | 50 000h |
| cropping area | max. 1.35 x 1.35m (at distance 3m) |
| brightness adjustment range | 0.2 – 100% |
| control | DALI |
| available housing colors | white |
| mounting | GLOBAL Trac® Pulse Control |
| weight | 1.9kg |
| dimensions | width: 270mm for the horizontal headlight<br>height: 313mm<br>diameter of the reflector: 87mm |

Podłęże, 02.06.2021

# DECLARATION OF CONFORMITY

PXM Marek Żupnik spółka komandytowa
Podłęże 654, 32-003 Podłęże

we declare that our product:

| | |
|---|---|
| *Product name:* | PxArt+ XL Frame DALI |
| *Product code:* | PX810-T |

meets the requirements of the following standards, as well as harmonised standards:

| | |
|---|---|
| PN-EN IEC 55015:2019-11 | EN IEC 55015:2019 |
| PN-EN IEC 61000-3-2:2019-04 | EN IEC 61000-3-2:2019 |
| PN-EN 62471:2010 | EN 62471:2008 |
| PN-EN 62386-101:2015-06 | EN 62386-101:2014 |
| PN-EN 62386-102:2015-06 | EN 62386-102:2014 |

and meets the essential requirements of the following directives:

2011/65/UE DIRECTIVE OF THE EUROPEAN PARLIAMENT AND OF THE COUNCIL of 8 June 2011 on the restriction of the use of certain hazardous substances in electrical and electronic equipment
Text with EEA relevance.

2014/35/UE DIRECTIVE OF THE EUROPEAN PARLIAMENT AND OF THE COUNCIL of 26 February 2014 on the harmonisation of the laws of the Member States relating to the making available on the market of electrical equipment designed for use within certain voltage limits

PXM
Marek Żupnik spółka komandytowa
32-003 Podłęże, Podłęże 654
NIP 677-002-54-53



mgr inż. Marek Żupnik.