PX838

LED Lamp Splitter

User manual

Table of Contents

1 Description....3
2 Safety conditions....4
3 Connector description....5
4 Connection scheme....7
5 Dimensions....9
6 Technical data....10

Manufacturer reserves the right to make modifications in order to improve device operation.

PXM Marek Żupnik sp.k.
Podłęże 654
32-003 Podłęże
BDO register number 000005972

tel. +48 12 385 83 06
mail: info@pxm.pl
www.pxm.pl

Rev.1-0
02.08.2023

1 Description

PX838 is a device that allows you to connect many LED lamps to one power supply and DMX controller. It is adapted to connect 4 lamps. If all output connectors are not occupied in the LED splitter, jumpers should be used between the pins of the DMX control signal.

The splitter is placed in a plastic housing with IP65 protection class.

The product is dedicated to work with PX837 lamps.

Wire colors:

Version 1

- white – V+ (24V DC),
- brown – V-,
- yellow – DMX- IN,
- gray – DMX- OUT,
- green – DMX+ IN,
- pink – DMX+ OUT.

Version 2

- red – V+ (24V DC),
- red-black – V-,
- green- black – DMX- IN,
- blue- black – DMX- OUT,
- green – DMX+ IN,
- blue – DMX+ OUT.

2 Safety conditions

The PX838 device was created to distribute the 24V DC power supply and the control signal to the PX837 lamps, however, during its installation and use, the following rules must be strictly observed:

1. The device may only be connected to 24V DC.
2. All the conductors should be protected against mechanical and thermal damage.
3. In the event of damaging any conductor, it should be replaced with a conductor of the same technical data.
4. Only a shielded cable should be use to connect the DMX signal.
5. All repairs and connection of the DMX signal can only be carried out with the power off.
6. All sudden shocks, particularly dropping, should be avoided.
7. Clean with damp duster only.

3 Connector description

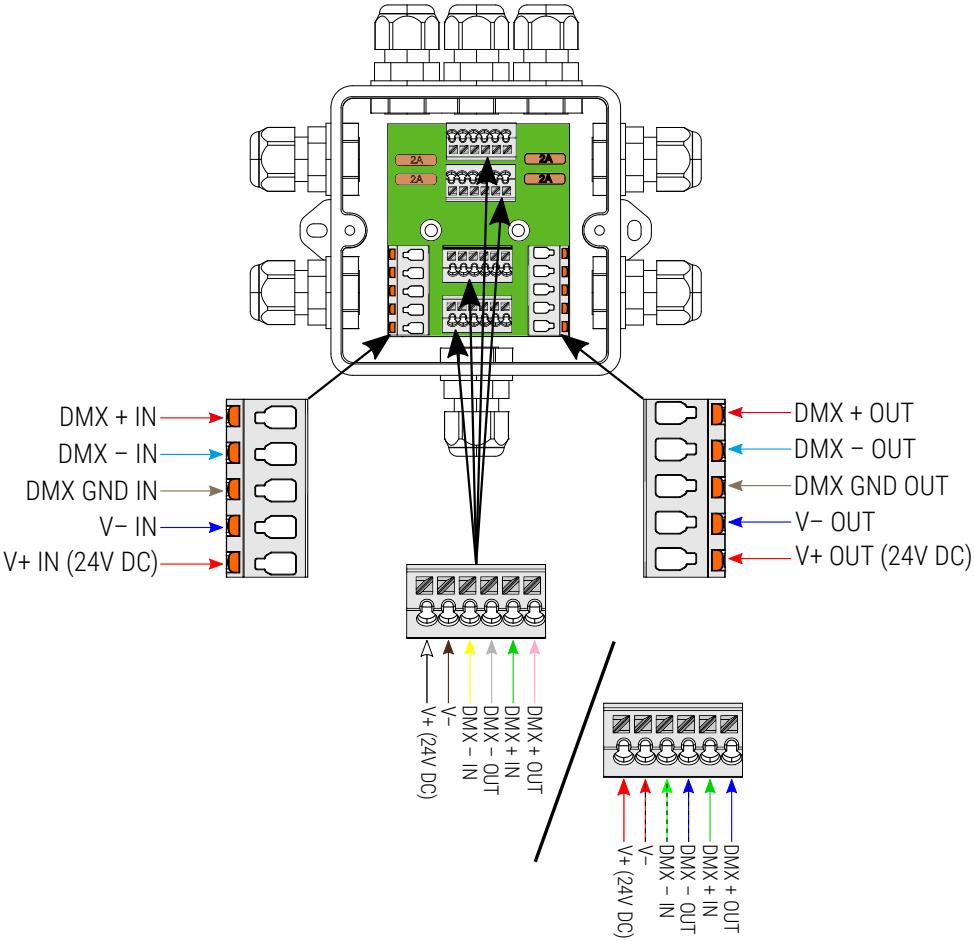

NOTE! The exact connection diagram can be found in point 4. Connection scheme.

NOTE! If all output connectors for PX837 lamps are not used on the distributor, you should short ***DMX – IN*** pins with ***DMX – OUT*** and ***DMX + IN*** with ***DMX + OUT*** pins. The diagram below shows only used 3 out of 4 output connectors.

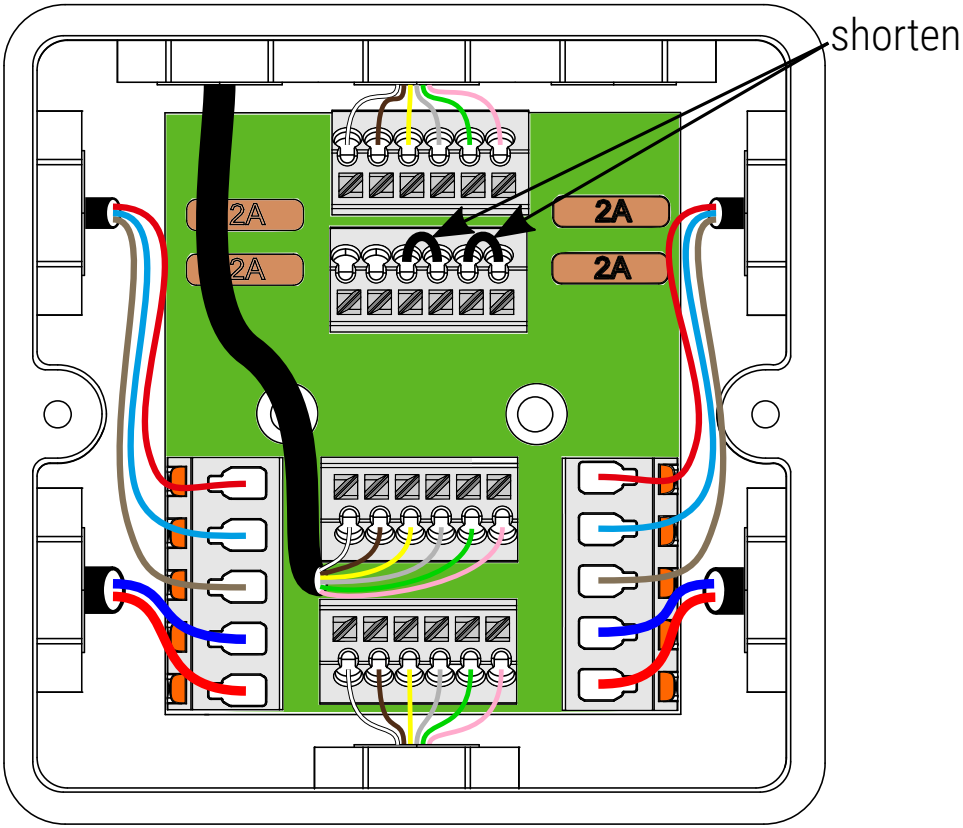

4 Connection scheme

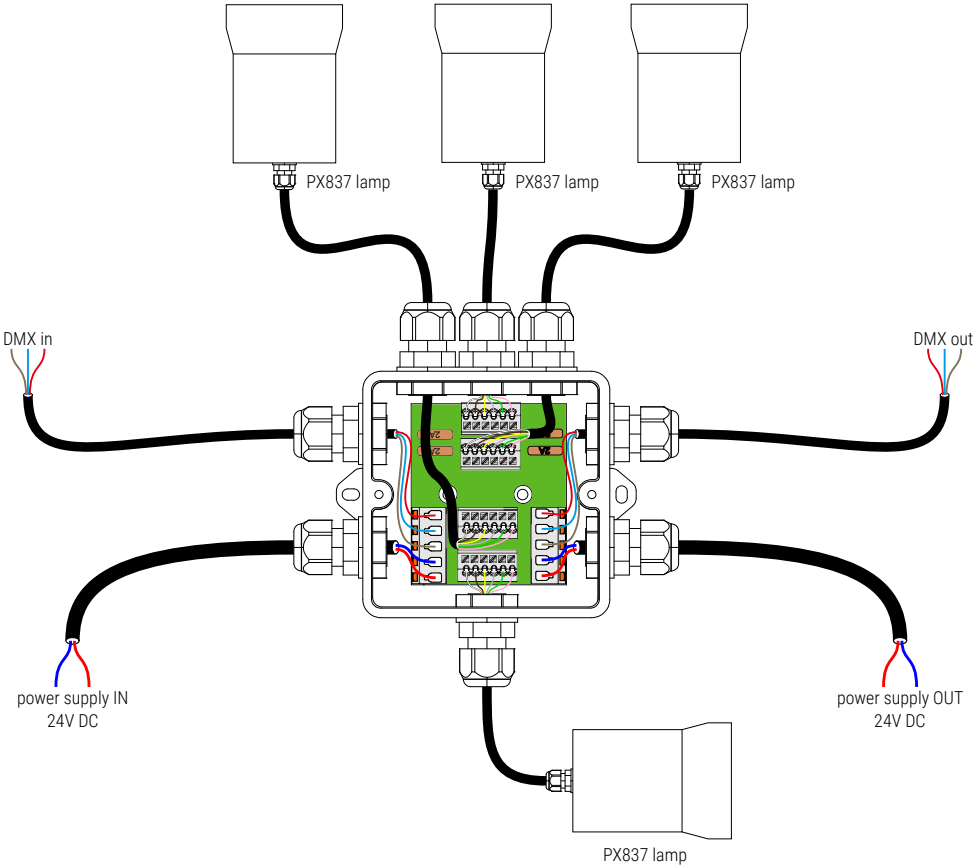

NOTE! Up to 32 PX837 lamps can be connected on one DMX line.

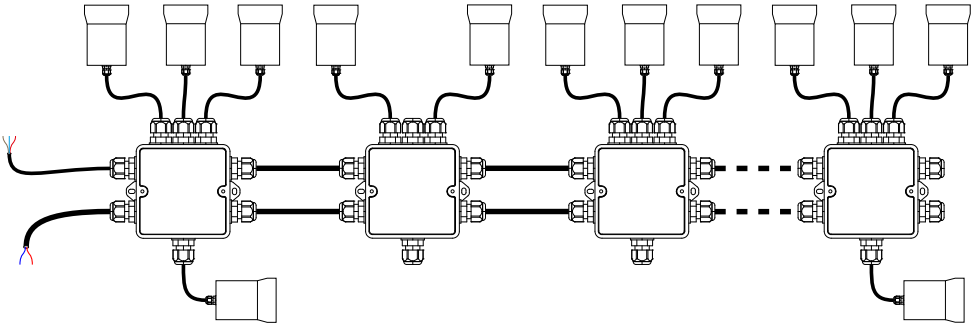

Example combinations (max. 32 lights on the DMX line):

- 8 splitters with 4 lamps each (32),
- 10 splitters with 3 lamps each (30),
- 3 splitters with 4 lamps each + 4 splitters with 3 lamps each + 4 splitters with 2 lamps each (32).

NOTE! A cylindrical plug should be placed in unused glands, and then the gland should be closed in order to maintain tightness of the casing. The dummy plugs are included in the kit.

5 Dimensions

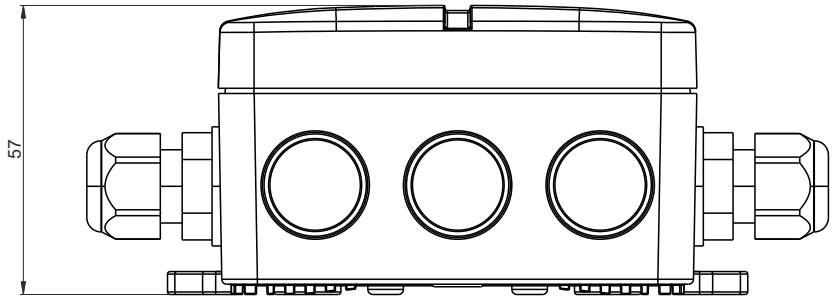

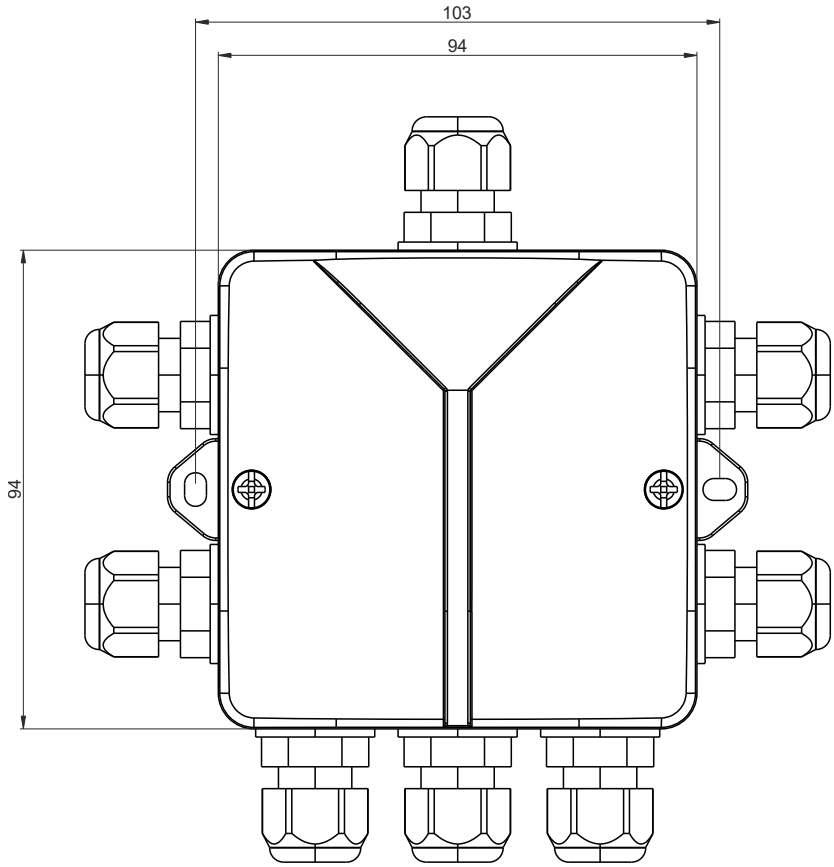

6 Technical data

type	PX838
number of lamp outputs	4
housing	plastic
number of cable gland	8
IP class	IP65
color	black
weight	0.3kg
dimensions	width: 94mm height: 94mm depth: 57mm

Podłęże, 03.08.2023

DECLARATION OF CONFORMITY

PXM Marek Żupnik spółka komandytowa
Podłęże 654, 32-003 Podłęże

we declare that our product:

Product name:	LED Lamp Splitter
Product code:	PX838

meets the requirements of the following standards, as well as harmonised standards:

PN-EN IEC 63000:2019-01	EN IEC 63000:2018
PN-EN 61000-4-2:2011	EN 61000-4-2:2009
PN-EN IEC 61000-6-1:2019-03	EN IEC 61000-6-1:2019
PN-EN IEC 61000-6-3:2021-08	EN IEC 61000-6-3:2021

and meets the essential requirements of the following directives:

2011/65/UE DIRECTIVE OF THE EUROPEAN PARLIAMENT AND OF THE COUNCIL of 8 June 2011 on the restriction of the use of certain hazardous substances in electrical and electronic equipment
Text with EEA relevance.

2014/30/UE DIRECTIVE OF THE EUROPEAN PARLIAMENT AND OF THE COUNCIL of 26 February 2014 on the harmonisation of the laws of the Member States relating to electromagnetic compatibility (recast)
Text with EEA relevance.

PXM
Marek Żupnik spółka komandytowa
32-003 Podłęże, Podłęże 654
NIP 677-002-54-53



mgr inż. Marek Żupnik.