

DATA SHEET

PX842
PxSpotBar

Device description

The PxSpotBar lamp is designed to illuminate museum or exhibition displays.

PX842 is a device powered by 230V AC. The lamp uses efficient LEDs that can be controlled using the DMX protocol. They provide many color variants and achieve different brightness levels. The device is produced in an RGBW version or with white diodes of a selected color temperature (or Dynamic White). Spots can be equipped with lenses with light flux angles of 10°, 25° or 40°. Each spot may have a different type of diodes and different lenses. PX842 is placed in an aluminum housing that ensures tightness at the IP54 level.

Each spot can be freely positioned thanks to the ability to change the direction of light in two axes.

The user can disassemble and assemble the spots in the lamp himself, depending on needs (1 – 4). The PX842 uses a simple spot assembly / disassembly system. Just plug in / unplug the plug connecting the spot with the lamp (*WEIPU ST12 Series – 6 pin*) and screw / unscrew one screw.

Example configurations of spot arrangement in the lamp:

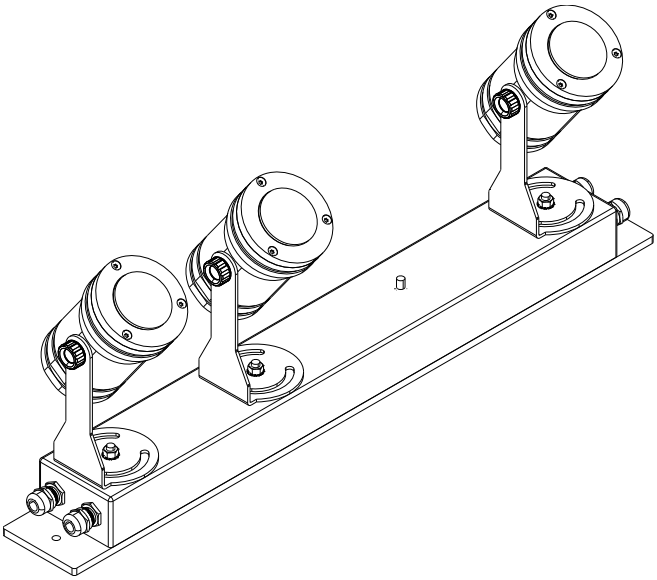

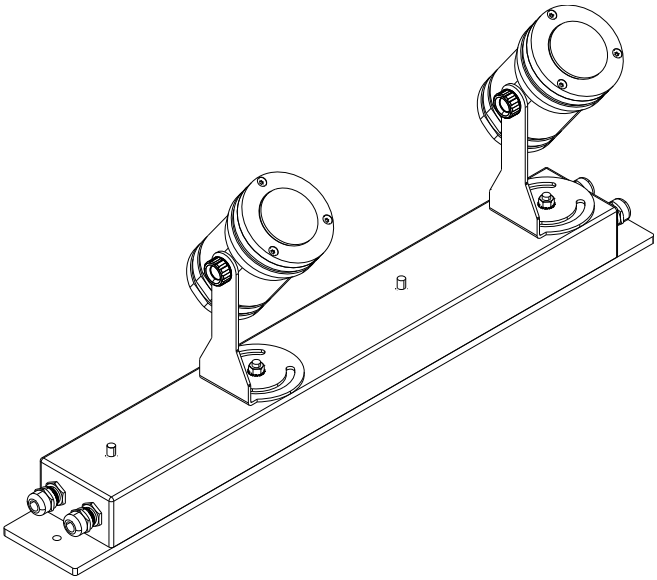

Variants available

When ordering a lamp, please choose:

- base color for spots (PX842-B PxSpot),



- number of spots and their configuration (PX837-B),



- number of plugs bridging the DMX signal (PX842-C), if fewer than 4 spots are used in the lamp.



Below is a description of the PX842-B model designations and their explanation:

PX842-B – Z

Z – housing color:
1 – gray
2 – black
3 – white

Below is a description of the PX837-B model designations with their explanation:

PX837-B – WW – YYY – Z

WW – beam angle:
10 – 10°
25 – 25°
40 – 40°

Z – housing color:
1 – gray (RAL 9006)
2 – black (RAL 9005)
3 – white (RAL 9010)

YYY – CRI / LED color / color temperature:
RGBW – RGBW
927 – CRI 90, 2700K
930 – CRI 90, 3000K
940 – CRI 90, 4000K
950 – CRI 90, 5000K
965 – CRI 90, 6500K
DW – Dynamic White
4CH-XXXX – 4 independent channels, e.g. RGBA, GGBB, RRBB (always 4 letters indicating the LED color)

NOTE! The configuration of the lens angle (WW) and diode type (YYY) applies to a single spot in the lamp. Each spot can be freely configured (lens angle / diode type).

Technical drawing

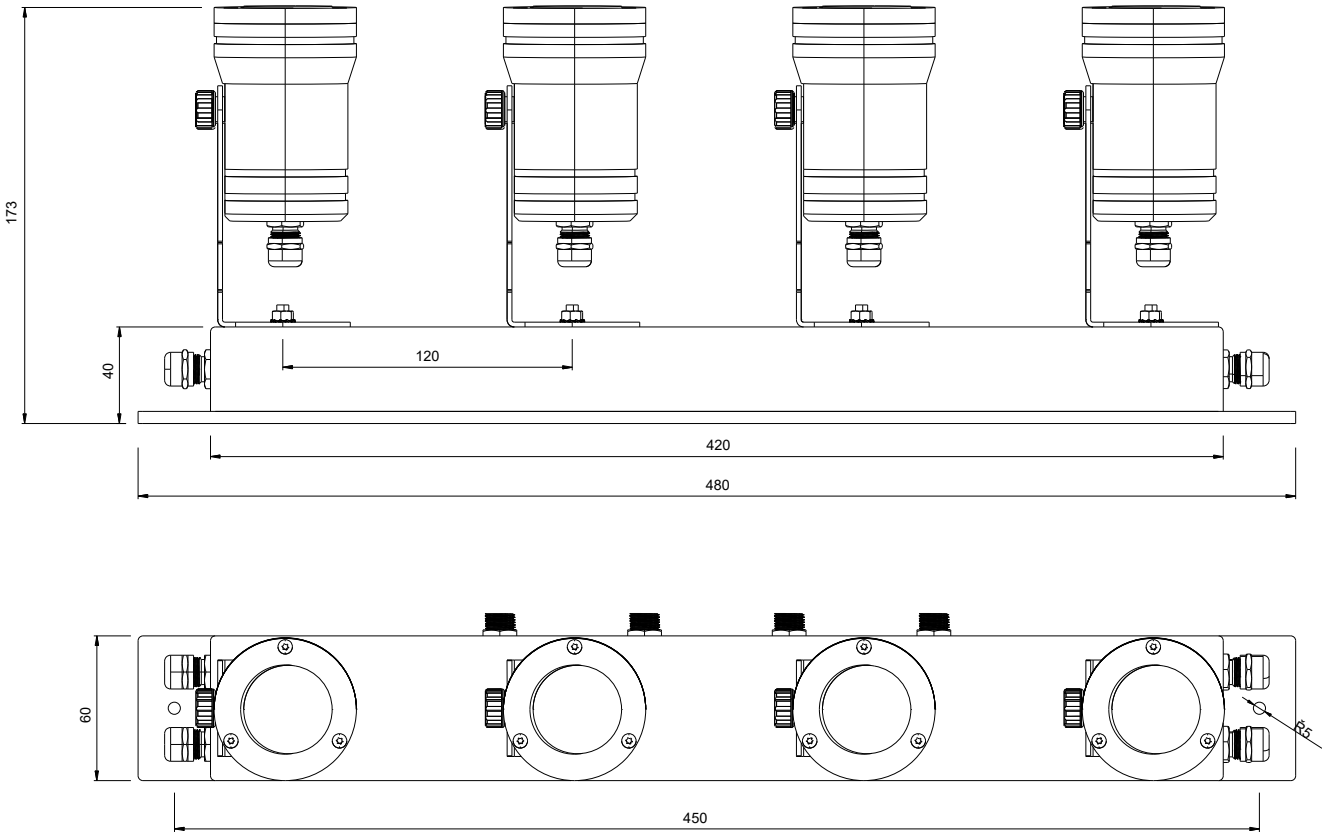

Connection diagram

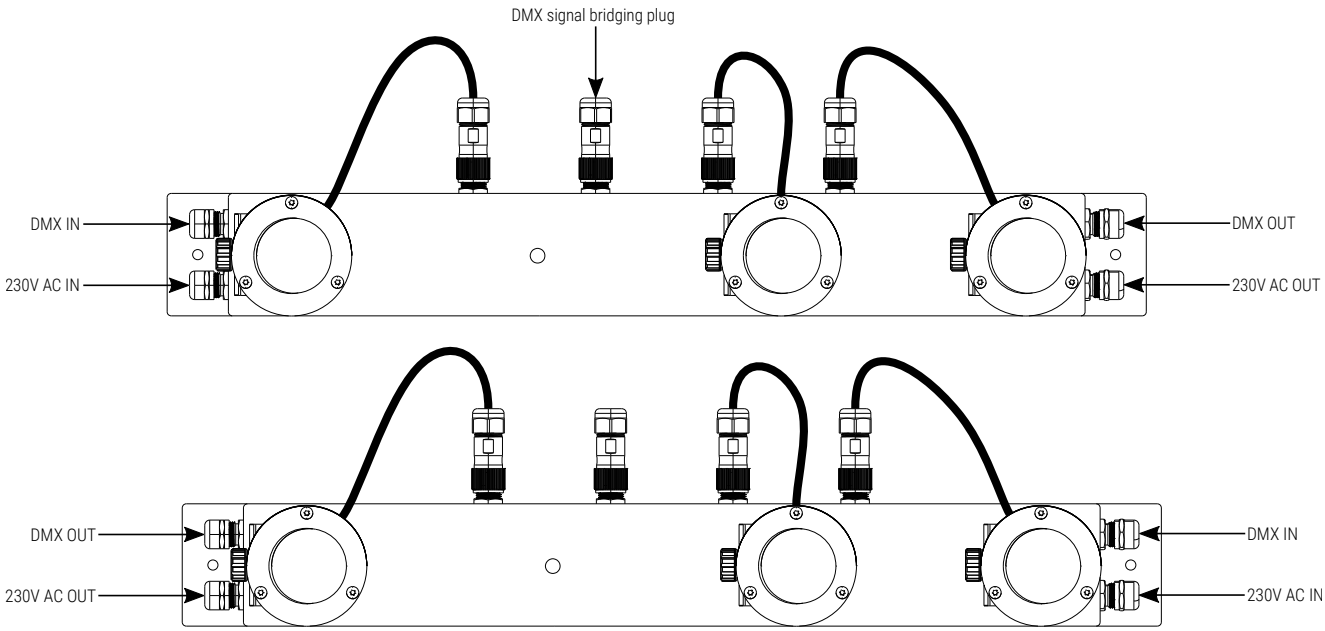

NOTE! The user can enter the DMX signal / power supply from any side, please remember that there will be a DMX signal / power output on the opposite side of the lamp.

Connection diagram of the DMX control signal and power supply inside the base:

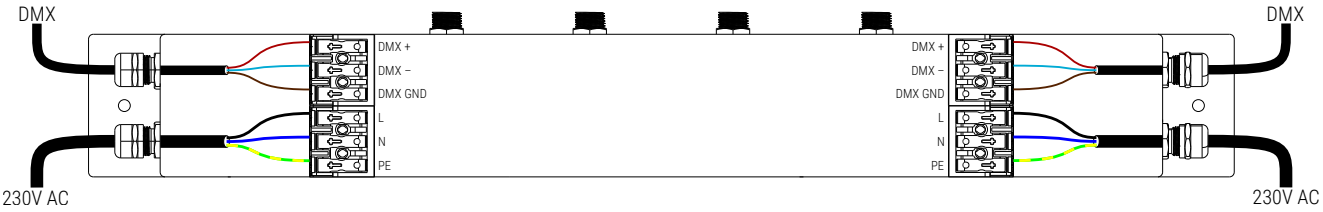

NOTE! If all lamps are not installed in the lamp, a DMX signal bridging plug (PX842-C) should be screwed in place of the empty output connector.

Technical data

type	PX842
power supply	230V AC
number of spots*	1 / 2 / 3 / 4
number of LEDs / spot	4
LEDs type**	RGBW Mono: 2700K / 3000K / 4000K / 5000K / 6500K DW: 2700K – 5000K 4CH-XXXX
power consumption	25W
lens angle***	10°, 25°, 40°
control	DMX / RDM
housing	aluminum
available housing colors	white, gray, black
lamp-spot connection	*WEIPU ST12 Series* connector
tightness class	IP54
dimensions	lenght: 480mm width: 60mm depth: 173mm

* – the customer can assemble / disassemble the spots in the lamp himself
** – different types of diodes can be used in each spot
*** – different lenses may be used in each spot