PX842

PxSpotBar

User manual

Table of Contents

1 Description....3
2 Safety conditions....4
3 Information on version....7
4 Control – DMX....9
5 RDM – available parameters....9
6 Installation....11
7 Connection scheme....12
8 Dimensions....14
9 Technical data....15

Manufacturer reserves the right to make modifications in order to improve device operation.

PXM Marek Żupnik sp.k.
Podłęże 654
32-003 Podłęże
BDO register number 000005972

tel. +48 12 385 83 06
mail: info@pxm.pl
www.pxm.pl

Rev.1-0
12.09.2023

1 Description

The PxSpotBar lamp is designed to illuminate museum or exhibition displays.

PX842 is a device powered by 230V AC. The lamp uses efficient LEDs that can be controlled using the DMX protocol. They provide many color variants and achieve different brightness levels. The device is produced in an RGBW version or with white diodes of a selected color temperature (or Dynamic White). Spots can be equipped with lenses with light flux angles of 10°, 25° or 40°. Each spot may have a different type of diodes and different lenses. PX842 is placed in an aluminum housing that ensures tightness at the IP54 level.

Each spot can be freely positioned thanks to the ability to change the direction of light in two axes.

The user can disassemble and assemble the spots in the lamp himself, depending on needs (1 – 4). The PX842 uses a simple spot assembly / disassembly system. Just plug in / unplug the plug connecting the spot with the lamp (*WEIPU ST12 Series – 6 pin*) and screw / unscrew one screw.

Example configurations of spot arrangement in the lamp:

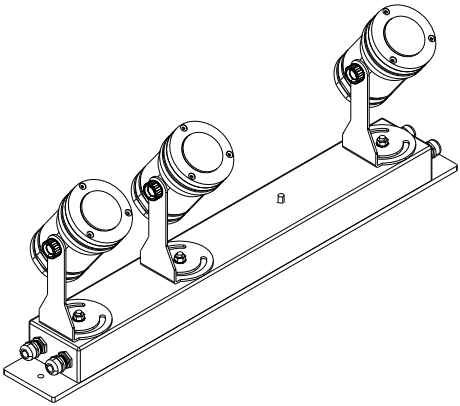

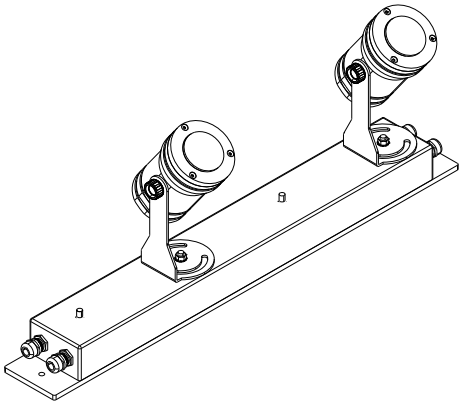

2 Safety conditions

Caution! Before installing, connecting and using the lamp you have to absolutely read this document.

The following symbols are used to underline important information on security on the product and in this manual.



Danger!
Risk of loss of life and health



Warning!
Fire hazard



Warning!
LED light emission, the risk of eye damage



Warning!
The risk of burns



Warning!
Read the instruction manual

Caution!

Do not look at the LEDs, LEDs can cause damage or eye irritation. Do not look at the light source with any optical devices that focus the light rays.



Light is harmful to unprotected eyes, can cause irritation, eye damage or even loss of eyesight.

While working outdoors in normal conditions, the housing unit can heat up to +65°C. Make sure that accidental contact with the device during use is impossible.

In case of improper usage of the product it may cause a risk of serious injury or death because of the threat of fire.

The PX842 device is powered directly from 230V power grid. Failure to comply with the safety rules may result in electric shock and may endanger the user's life. Therefore it is necessary to observe the following:

1. Installation should be performed by a person holding the appropriate qualifications, according to the instruction manual.
2. The electrical installation to which the lamp is to be connected must meet the safety requirements (the installation must be 3-wire and equipped with a residual current device).
3. All the conductors should be protected against mechanical and thermal damage.
4. In the event of damaging any conductor, it should be replaced with a conductor of the same technical data.
5. All repairs, should be made with cut off power supply.
6. Do not connect to the power supply to device with visible damage.
7. All sudden shocks, particularly dropping, should be avoided.
8. The device cannot be used in places with temperature lower than +2°C or higher than +40°C.
9. Clear with damp cloth only.

3 Information on version

When ordering a lamp, please choose:

- base color for spots (PX842-B PxSpot),



- number of spots and their configuration (PX837-B),



- number of plugs bridging the DMX signal (PX842-C), if fewer than 4 spots are used in the lamp.



Below is a description of the PX842-B model designations and their explanation:

PX842-B – Z

Z – housing color:

1 – gray

2 – black

3 – white

Below is a description of the PX837-B model designations with their explanation:

PX837-B – WW – YYY – Z

WW – beam angle:	YYY – CRI / LED color / color temperature:
10 – 10°	RGBW – RGBW
25 – 25°	927 – CRI 90, 2700K
40 – 40°	930 – CRI 90, 3000K
	940 – CRI 90, 4000K
Z – housing color:	950 – CRI 90, 5000K
1 – gray (RAL 9006)	965 – CRI 90, 6500K
2 – black (RAL 9005)	DW – Dynamic White
3 – white (RAL 9010)	4CH-XXXX – 4 independent channels, e.g. RGBA, GGBB, RRBB (always 4 letters indicating the LED color)

NOTE! The configuration of the lens angle (WW) and diode type (YYY) applies to a single spot in the lamp. Each spot can be freely configured (lens angle / diode type).

4 Control – DMX

The spot can be controlled using a DMX signal:

- *MONO*:
  - 1 channel – brightness,
- *Dynamic White*:
  - 1 channel – color temperature,
  - 2 channel – brightness,
- *RGBW*:
  - 1 channel – red (brightness),
  - 2 channel – green (brightness),
  - 3 channel – blue (brightness),
  - 4 channel – white (brightness),
- *4CH-XXXX*:
  - each channel individually (brightness).

5 RDM – available parameters

PX842 supports the DMX–RDM protocol (each spot individually). The DMX protocol is intended to enable unidirectional data flow, while its extension – the RDM protocol – can send information in two directions. Thanks to this, it is possible to receive and send information simultaneously, which makes it possible to monitor the operation of devices compliant with the RDM protocol and possibly change the configuration of their operating parameters.

Individually in each spot via RDM you can:

- set the starting DMX address – in the range **1 – 512**,
- restore factory settings,
- change the *No Signal* mode settings (spot behavior after the DMX control signal disappears):
  - ***0*** – ***OFF*** (complete shutdown),
  - ***1*** – ***ON*** (switching on 100%),
  - ***2*** – ***SCENE*** (switching on a defined scene),
  - ***3*** – ***HOLD*** (maintaining the last DMX signal value),
- program the scene activated in the *No Signal* parameter in ***SCENE*** mode:
  - *MONO*: 1 channel in the range 0 – 255 (brightness),
  - *Dynamic White*: 2 channels in the range 0 – 255 (brightness / color temperature),
  - *RGBW*: 4 channels in the range 0 – 255 (brightness of individual colors),
  - *4CH-XXXX*: each channel individually,
- define the time during which the *No Signal* mode is to be activated, in the range of **0 – 100** (0 – 10s),
- set the smoothing level in the range ***0 – 4*** (***OFF*** / ***L1*** / ***L2*** / ***L3*** / ***L4***),
- set an additional device description (max. 32 ASCII characters),
- read parameters:
  - serial number,
  - spot temperature.

6 Installation

1. Before assembling the spot, place a rubber washer on the pin [1].
2. Place the spot on the pin [2].
3. Screw on the nut [3].

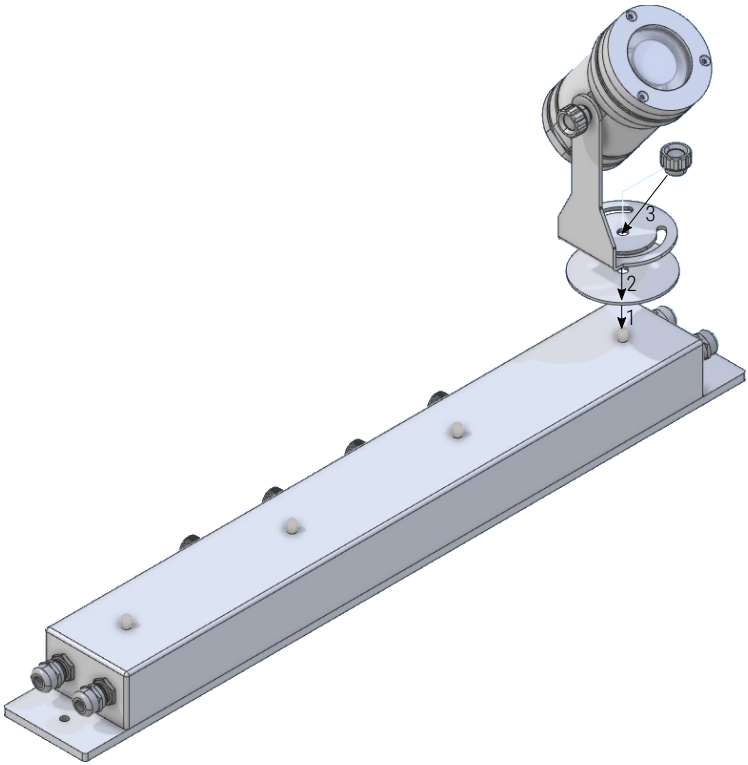

4. After screwing the spot, connect it to the base using a cable coming from the spot with a Weipu plug.

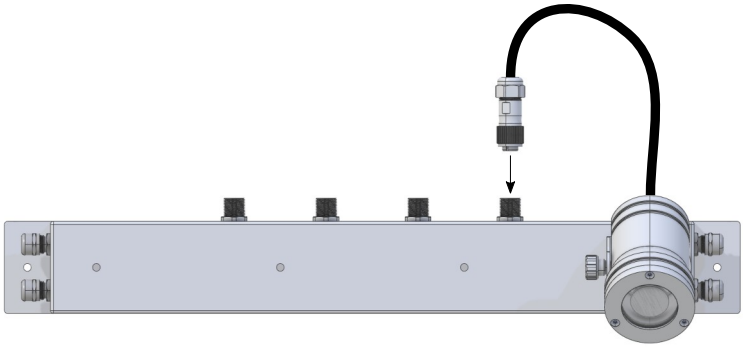

7 Connection scheme

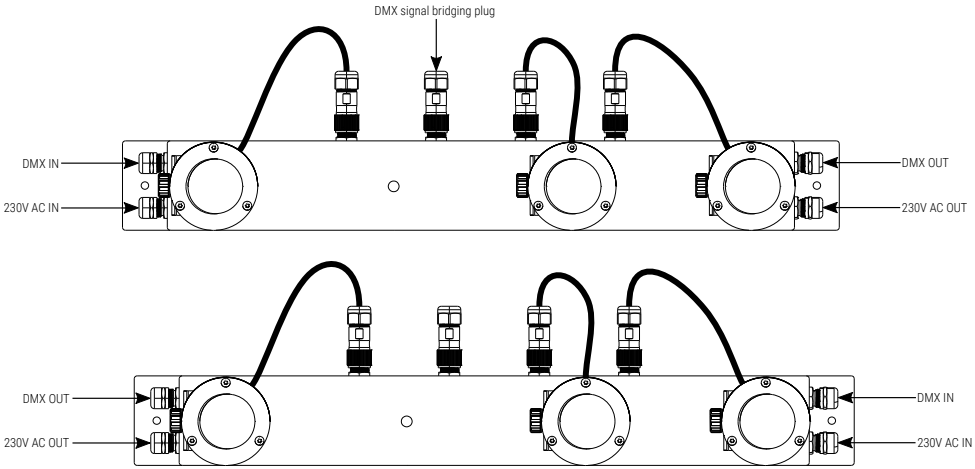

NOTE! The user can enter the DMX signal / power supply from any side, please remember that there will be a DMX signal / power output on the opposite side of the lamp.

Connection diagram of the DMX control signal and power supply inside the base:

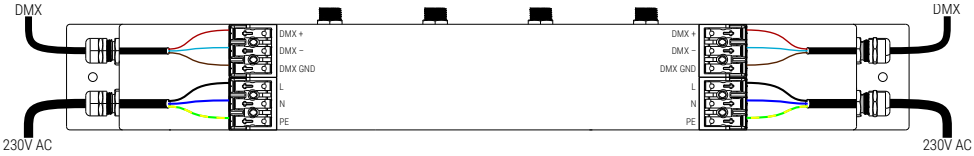

NOTE! If all lamps are not installed in the lamp, a DMX signal bridging plug (PX842-C) should be screwed in place of the empty output connector.

In the last lamp on the DMX line, connect a terminator (120 Ohm resistor) to the **DMX+ OUT** and **DMX– OUT** connectors:

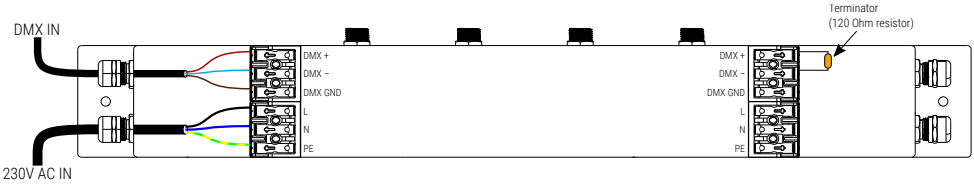

8 Dimensions

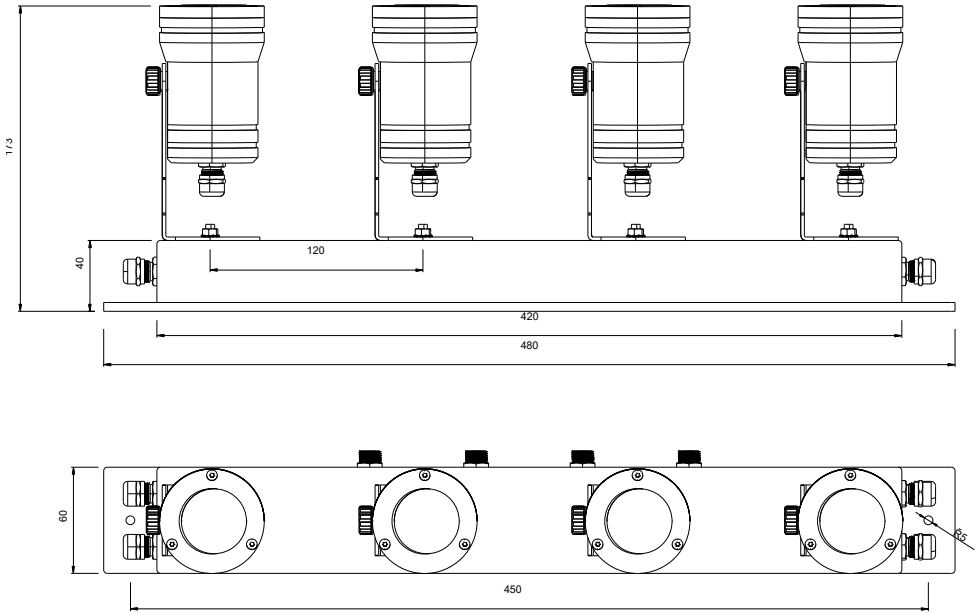

9 Technical data

type	PX842
power supply	230V AC
number of spots*	1 / 2 / 3 / 4
number of LEDs / spot	4
LEDs type**	RGBW Mono: 2700K / 3000K / 4000K / 5000K / 6500K DW: 2700K – 5000K 4CH-XXXX
power consumption	25W (4 spots)
lens angle***	10°, 25°, 40°
control	DMX / RDM
housing	aluminum
available housing colors	white, gray, black
lamp-spot connection	*WEIPU ST12 Series* connector
tightness class	IP54
dimensions	lenght: 480mm width: 60mm depth: 173mm

* – the customer can assemble / disassemble the spots in the lamp himself

** – different types of diodes can be used in each spot

*** – different lenses may be used in each spot

Podłęże, 12.09.2023

DECLARATION OF CONFORMITY

PXM Marek Żupnik spółka komandytowa
Podłęże 654, 32-003 Podłęże

we declare that our product:

Product name:	PxSpotBar
Product code:	PX842

meets the requirements of the following standards, as well as harmonised standards:

PN-EN IEC 63000:2019-01	EN IEC 63000:2018
PN-EN 60598-1:2015	EN 60598-1:2015
PN-EN 62471:2010	EN 62471:2008
PN-EN 61000-4-2:2011	EN 61000-4-2:2009
PN-EN IEC 61000-6-1:2019-03	EN IEC 61000-6-1:2019
PN-EN 61000-6-3:2008	EN 61000-6-3:2007

and meets the essential requirements of the following directives:

2011/65/UE DIRECTIVE OF THE EUROPEAN PARLIAMENT AND OF THE COUNCIL of 8 June 2011 on the restriction of the use of certain hazardous substances in electrical and electronic equipment
Text with EEA relevance.

2014/30/UE DIRECTIVE OF THE EUROPEAN PARLIAMENT AND OF THE COUNCIL of 26 February 2014 on the harmonisation of the laws of the Member States relating to electromagnetic compatibility (recast)
Text with EEA relevance.

2014/35/UE DIRECTIVE OF THE EUROPEAN PARLIAMENT AND OF THE COUNCIL of 26 February 2014 on the harmonisation of the laws of the Member States relating to the making available on the market of electrical equipment designed for use within certain voltage limits

PXM
Marek Żupnik spółka komandytowa
32-003 Podłęże, Podłęże 654
NIP 677-002-54-53

mgr inż. Marek Żupnik.