PX865

Audio Amplifier

2 x 100W RMS

User manual

Table of Contents

1 Description....3
2 Safety conditions....4
3 Connectors and control elements....5
4 Device programming....6
4.1 Button features....6
4.2 Description of information parameters....7
4.3 DMX address....8
4.4 Operating modes....9
4.5 Response to the lack of DMX signal....11
4.6 Default settings....13
5 Control – DMX....14
5.1 P1 mode....14
5.2 P2 mode....15
5.3 P3 mode....18
5.4 P4 mode....22
6 Programming....25
7 RDM parameters....26
8 Diode signaling....28
9 Connecting the DMX signal....29
10 Connection scheme....30
11 Dimensions....30
12 Technical data....31

Manufacturer reserves the right to make modifications in order to improve device operation.

PXM Marek Żupnik sp.k.
Podłęże 654
32-003 Podłęże
BDO register number 000005972

tel. +48 12 385 83 06
mail: info@pxm.pl
www.pxm.pl

Rev.1-0
09.04.2026

1 Description

The PX865 is a compact audio amplifier with a power of 2 x 100W, designed for sound systems in commercial, office and industrial facilities. The device ensures high sound quality, stable operation and easy integration with permanent installations.

The amplifier is equipped with an unbalanced input, a balanced input and an S/PDIF input, which allows it to work with a wide range of audio signal sources. Separate output terminals for both channels allow you to power two independent speakers.

The amplifier is controlled via a DMX signal. Additionally, the PX865 implements the RDM protocol.

The device is powered by 24 – 36V DC and enclosed in a plastic housing, adapted for mounting on a standard 35mm DIN rail used in switchboards and control cabinets.

2 Safety conditions

PX865 is a device powered by a safe voltage of 24 – 36V DC, however, during its installation and use, the following rules must be strictly observed:

1. The device may only be connected to 23 – 36V DC (stabilized voltage) with current-carrying capacity compatible with technical data.
2. All the conductors should be protected against mechanical and thermal damage.
3. In the event of damaging any conductor, it should be replaced with a conductor of the same technical data.
4. Connection of DMX signal can only be made with shielded conductor.
5. All repairs and connections of outputs or DMX signal can only be made with cut off power supply.
6. The PX865 should be strictly protected against contact with water and other liquids.
7. All sudden shocks, particularly dropping, should be avoided.
8. The device cannot be turned on in places with humidity exceeding 90%.
9. The device cannot be used in places with temperature lower than +2°C or higher than +40°C.
10. Clean with damp duster only.

3 Connectors and control elements

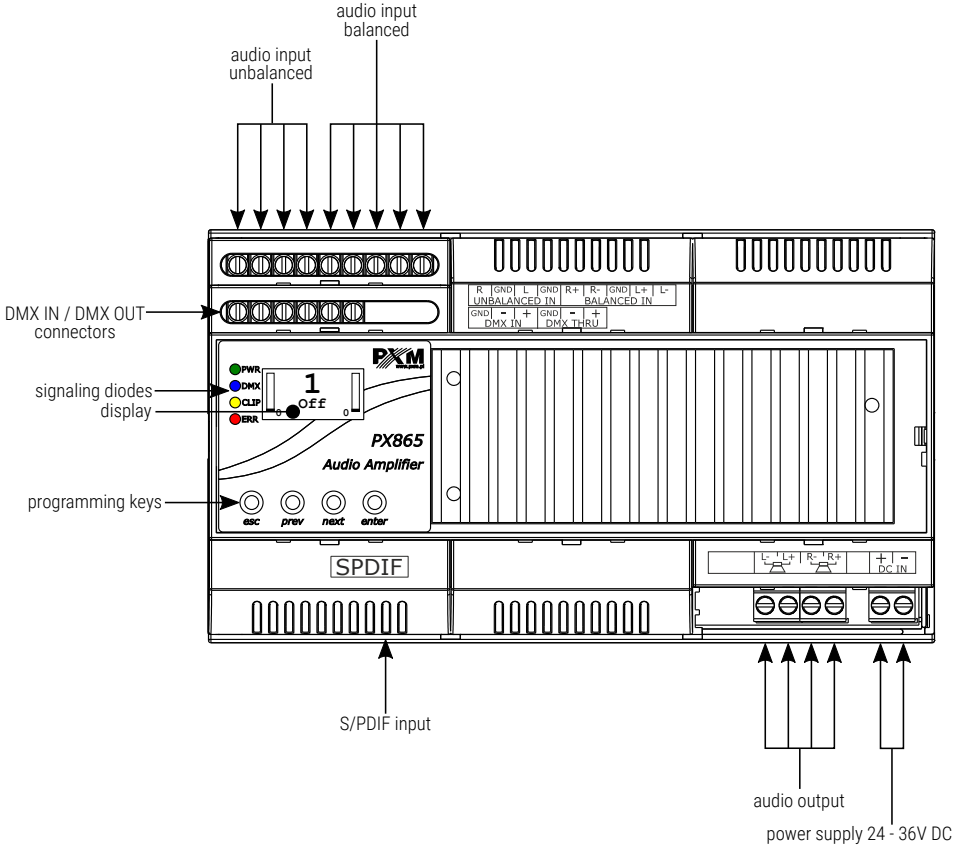

4 Device programming

After turning on the device, the display will show the DMX address, signal source and volume of the left and right channels. To go to the main menu, press *enter*. To select the appropriate menu, press the *prev* or *next* buttons and then press *enter* to confirm your selection.

4.1 Button features

esc – exits the currently programmed parameter without saving changes or moves to a higher menu level

prev – scrolls the menu backwards or decreases the set values

next – scrolls forward in the menu or increases the set values

enter – enters the device programming and confirms the set values

When a parameter is currently being edited, e.g. a DMX address, a frame flashes on the screen (0.5 / 0.5s).

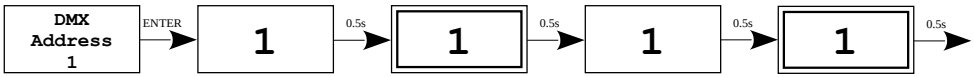

4.2 Description of information parameters

The on-screen menu allows you to read information parameters about the amplifier, such as:

- main window:
  - output power [%] L/R,
  - current DMX address,
  - current sound source,

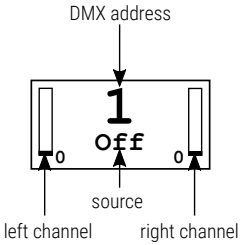

- bass, treble, balance,
- serial number,
- installed software and bootloader version.

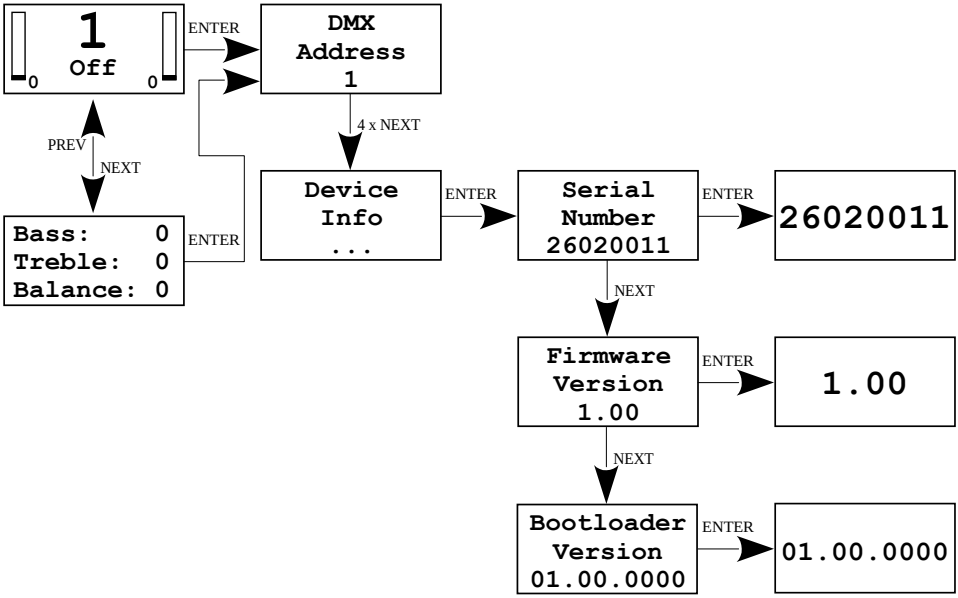

4.3 DMX address

The PX865 device menu allows you to set the device's DMX address in groups between 1 and 508. The remaining channels will be assigned automatically, one after another.

For example, if you set the start address to 100 in *P2 (4ch)* mode, the fixture will use DMX channels 100 to 103.

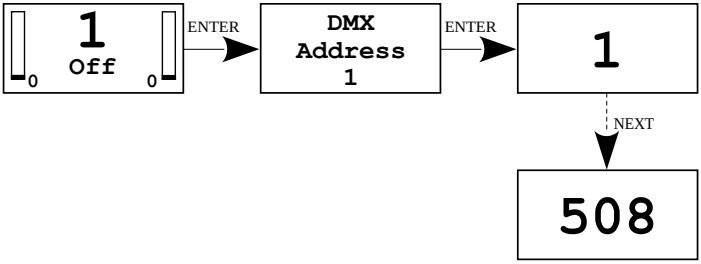

4.4 Operating modes

The amplifier can operate in 4 different modes:

- P1
  - channel 1: source
  - channel 2: volume
- P2
  - channel 1: source
  - channel 2: volume
  - channel 3: BASS
  - channel 4: TREBLE
- P3
  - channel 1: source
  - channel 2: volume
  - channel 3: BASS
  - channel 4: TREBLE
  - channel 5: balance
- P4
  - channel 1: source
  - channel 2: left channel volume
  - channel 3: right channel volume
  - channel 4: BASS
  - channel 5: TREBLE

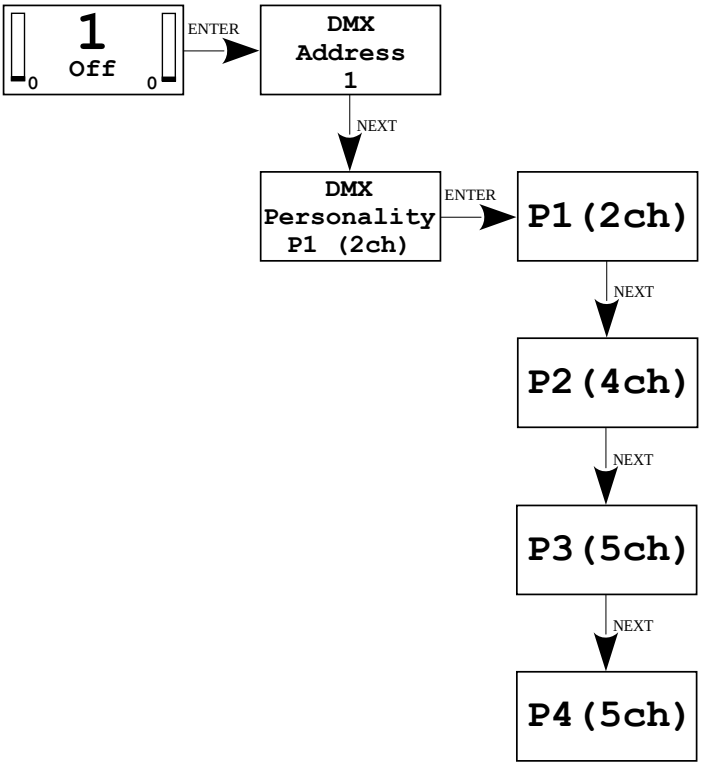
1
Off
0
0
ENTER
DMX
Address
1
NEXT
DMX
Personality
P1 (2ch)
ENTER
P1(2ch)
NEXT
P2(4ch)
NEXT
P3(5ch)
NEXT
P4(5ch)

4.5 Response to the lack of DMX signal

This function is used to protect against DMX signal loss, as well as to control the amplifier without connecting an external controller. Once activated, the PX865 will perform the selected function independently in the absence of a DMX signal.

Reconnecting the DMX signal will automatically interrupt the current function and the PX865 will again execute the commands sent via the DMX line.

Available options:

- *Off* – completely turning off the output (the input signal is disconnected),
- *Hold* – maintaining the last value on the DMX channel,
- *Manual* – opening statically programmed settings
  - source:
    - *Off* – completely turning off the output (the audio input signal is disconnected),
    - *Mute* – the output is muted (volume 0%),
    - *Optical* – S/PDIF digital input,
    - *Balanced – Balanced* input,
    - *Line-In – Unbalanced* input,
  - volume L:
    - range 0 – 100%,

- volume R:
  - range 0 – 100%,
- Bass:
  - range from -10 to +10,
- Treble:
  - range from -10 to +10.

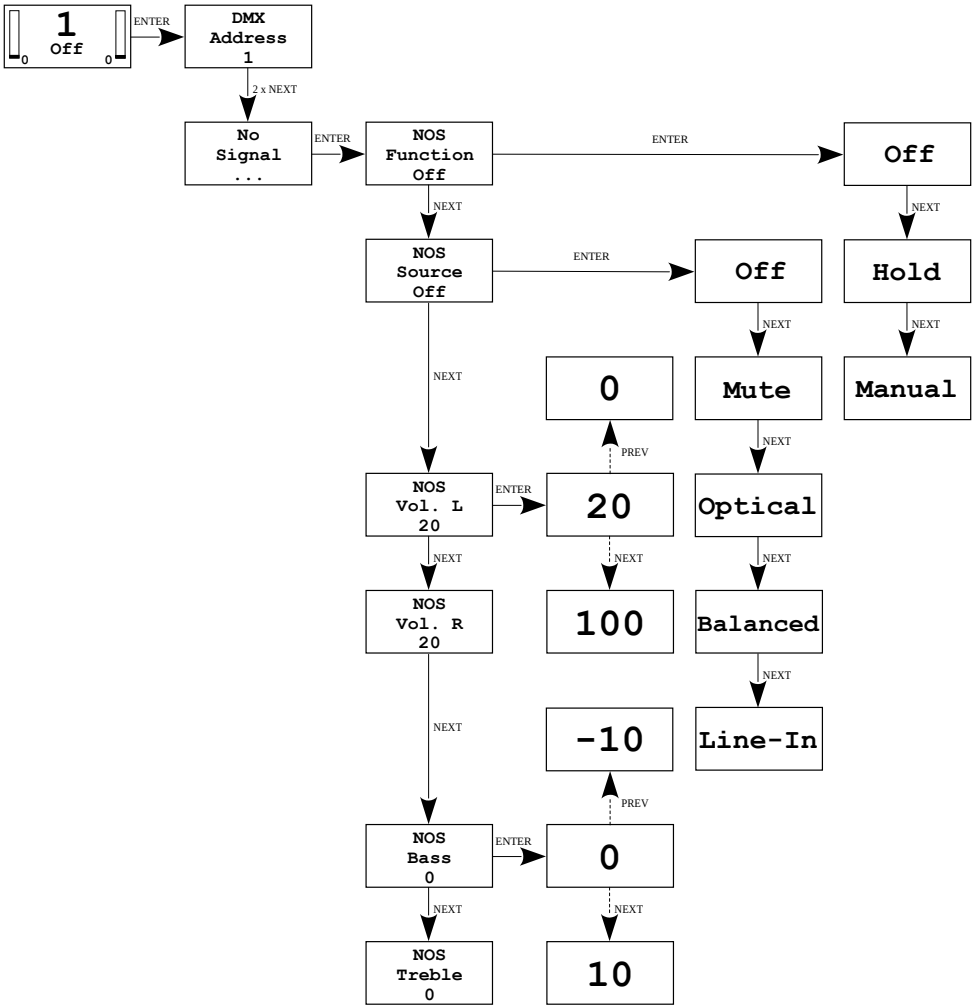

4.6 Default settings

The device is equipped with the ability to restore default settings and can be restored from the menu.

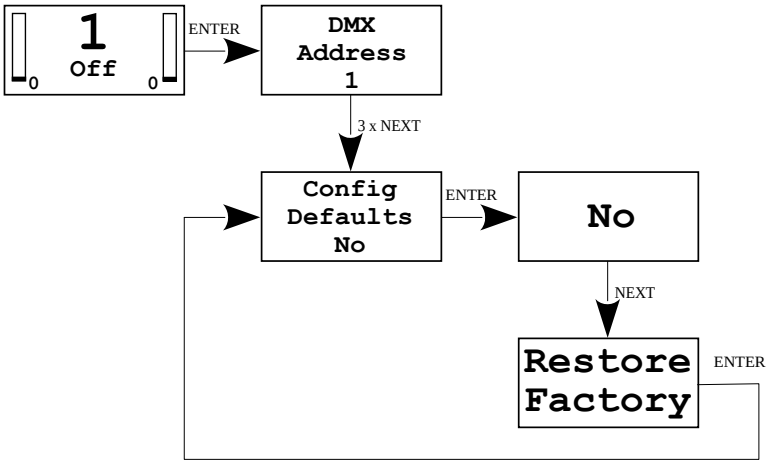

The default settings on the PX865 are as follows:

- DMX address: *1*
- operating mode: *P1 (2ch)*
- No signal:
  - NOS Function: *Off*
  - NOS Source: *Off*
  - NOS Vol. L: *20*
  - NOS Vol. R: *20*
  - NOS Bass: *0*
  - NOS Treble: *0*

NOTE! Successful restoration of factory settings is indicated by all LEDs lighting up for 3 seconds.

5 Control – DMX

Control is via DMX signal depending on the selected operating mode. (4.4. Operating modes).

5.1 P1 mode

Channel 1 (source)	Channel value	Source
	0 – 51	0 (*Off*)
	52 – 103	1 (*Mute*)
	104 – 155	2 (*Optical*)
	156 – 207	3 (*Balanced*)
	208 – 255	4 (*Line-In*)

Channel 2 (volume)	Channel value	Volume
	0	0%
	128	50%
	255	100%

5.2 P2 mode

Channel 1 (source)	Channel value	Source
	0 – 51	0 (*Off*)
	52 – 103	1 (*Mute*)
	104 – 155	2 (*Optical*)
	156 – 207	3 (*Balanced*)
	208 – 255	4 (*Line-In*)

Channel 2 (volume)	Channel value	Volume
	0	0%
	128	50%
	255	100%

Channel 3 (BASS)	Channel value	BASS
	0	0
	1 – 6	-10
	7 – 19	-9
	20 – 31	-8
	32 – 44	-7
	45 – 57	-6
	58 – 70	-5
	71 – 82	-4
	83 – 95	-3
	96 – 108	-2
	109 – 121	-1
	122 – 133	0
	134 – 146	1
	147 – 159	2
	160 – 172	3
	173 – 184	4
	185 – 197	5
	198 – 210	6
	211 – 223	7
	224 – 235	8
	236 – 248	9
	249 – 255	10

Channel 4 (TREBLE)	Channel value	TREBLE
	0	0
	1 – 6	-10
	7 – 19	-9
	20 – 31	-8
	32 – 44	-7
	45 – 57	-6
	58 – 70	-5
	71 – 82	-4
	83 – 95	-3
	96 – 108	-2
	109 – 121	-1
	122 – 133	0
	134 – 146	1
	147 – 159	2
	160 – 172	3
	173 – 184	4
	185 – 197	5
	198 – 210	6
	211 – 223	7
	224 – 235	8
	236 – 248	9
	249 – 255	10

5.3 P3 mode

Channel 1 (source)	Channel value	Source
	0 – 51	0 (*Off*)
	52 – 103	1 (*Mute*)
	104 – 155	2 (*Optical*)
	156 – 207	3 (*Balanced*)
	208 – 255	4 (*Line-In*)

Channel 2 (volume)	Channel value	Volume
	0	0%
	128	50%
	255	100%

Channel 3 (BASS)	Channel value	BASS
	0	0
	1 – 6	-10
	7 – 19	-9
	20 – 31	-8
	32 – 44	-7
	45 – 57	-6
	58 – 70	-5
	71 – 82	-4
	83 – 95	-3
	96 – 108	-2
	109 – 121	-1
	122 – 133	0
	134 – 146	1
	147 – 159	2
	160 – 172	3
	173 – 184	4
	185 – 197	5
	198 – 210	6
	211 – 223	7
	224 – 235	8
	236 – 248	9
	249 – 255	10

Channel 4 (TREBLE)	Channel value	TREBLE
	0	0
	1 – 6	-10
	7 – 19	-9
	20 – 31	-8
	32 – 44	-7
	45 – 57	-6
	58 – 70	-5
	71 – 82	-4
	83 – 95	-3
	96 – 108	-2
	109 – 121	-1
	122 – 133	0
	134 – 146	1
	147 – 159	2
	160 – 172	3
	173 – 184	4
	185 – 197	5
	198 – 210	6
	211 – 223	7
	224 – 235	8
	236 – 248	9
	249 – 255	10

Channel 5 (balance)	Channel value	Balance
	0	-100
	1	-100
	2	-99
	…	
	120	-1
	121 – 135	0
	136	+1
	…	
	253	+98
	254	+99
	255	+100

5.4 P4 mode

Channel 1 (source)	Channel value	Source
	0 – 51	0 (*Off*)
	52 – 103	1 (*Mute*)
	104 – 155	2 (*Optical*)
	156 – 207	3 (*Balanced*)
	208 – 255	4 (*Line-In*)

Channel 2 (volume L)	Channel value	Volume L
	0	0%
	128	50%
	255	100%

Channel 3 (volume R)	Channel value	Volume R
	0	0%
	128	50%
	255	100%

Channel 4 (BASS)	Channel value	BASS
	0	0
	1 – 6	-10
	7 – 19	-9
	20 – 31	-8
	32 – 44	-7
	45 – 57	-6
	58 – 70	-5
	71 – 82	-4
	83 – 95	-3
	96 – 108	-2
	109 – 121	-1
	122 – 133	0
	134 – 146	1
	147 – 159	2
	160 – 172	3
	173 – 184	4
	185 – 197	5
	198 – 210	6
	211 – 223	7
	224 – 235	8
	236 – 248	9
	249 – 255	10

Channel 4 (TREBLE)	Channel value	TREBLE
	0	0
	1 – 6	-10
	7 – 19	-9
	20 – 31	-8
	32 – 44	-7
	45 – 57	-6
	58 – 70	-5
	71 – 82	-4
	83 – 95	-3
	96 – 108	-2
	109 – 121	-1
	122 – 133	0
	134 – 146	1
	147 – 159	2
	160 – 172	3
	173 – 184	4
	185 – 197	5
	198 – 210	6
	211 – 223	7
	224 – 235	8
	236 – 248	9
	249 – 255	10

6 Programming

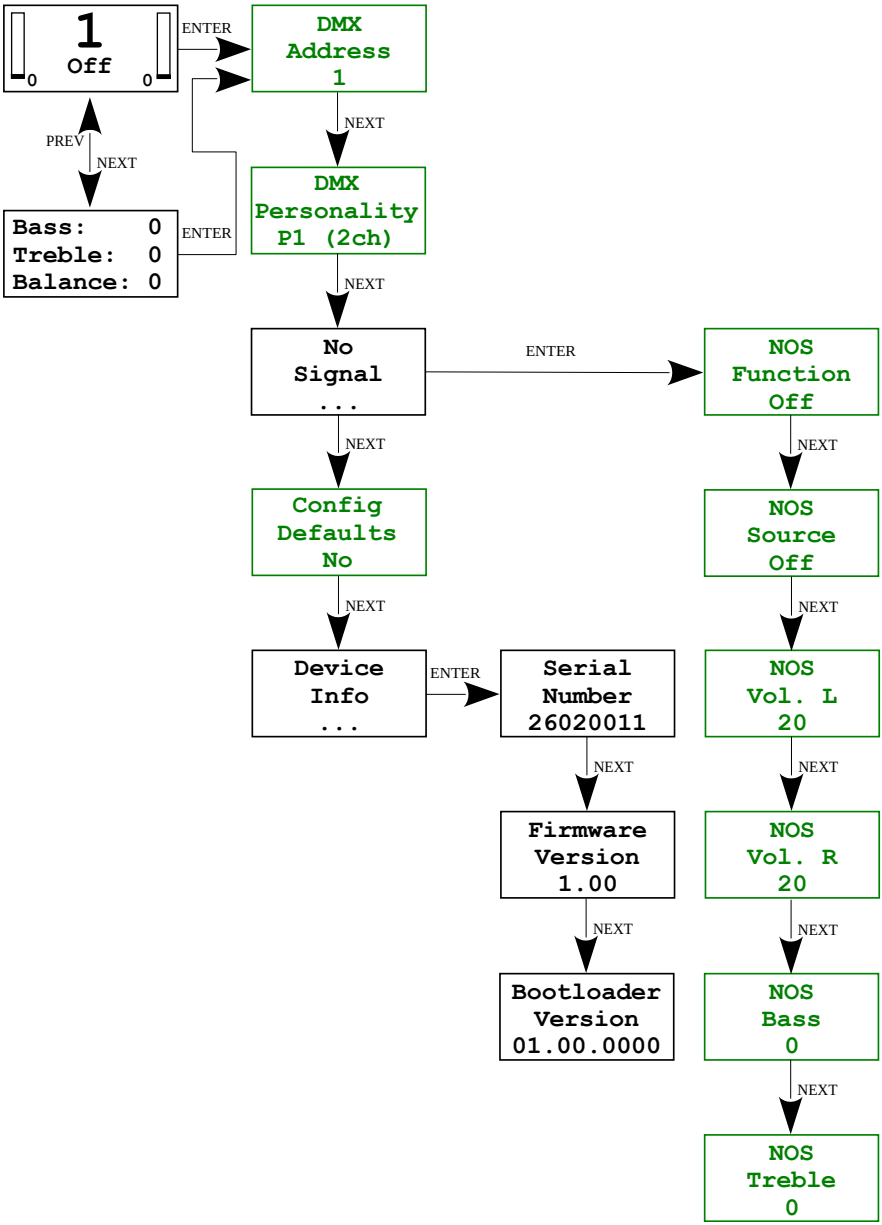

NOTE! Editable parameters are marked in green.

7 RDM parameters

The PX865 supports the DMX–RDM protocol. While DMX is designed to allow unidirectional data flow, its extension, the RDM protocol, can transmit information bidirectionally. This allows for simultaneous data reception and transmission, enabling the monitoring of RDM-compliant devices and the potential reconfiguration of their operating parameters.

Through the RDM protocol it is possible to:

- read information parameters:
  - model,
  - manufacturer,
  - software version,
- change the device name,
- change the starting DMX address (in the range 1 – 508),
- change the operating mode (as described in section 4.4. Operating modes),
- restore default settings (as described in section 4.6. Default settings),

NOTE! Successful restoration of factory settings is indicated by all LEDs lighting up for 3 seconds.

- configure the behavior on DMX control signal loss (as described in section 4.5. Response to the lack of DMX signal):
    - function:
        - OFF (0),
        - HOLD (1),
        - MANUAL (2),
    - source:
        - OFF (0),
        - MUTE (1),
        - OPT (2) – S/PDIF digital input,
        - BAL (3) – *Balanced* input,
        - LIN (4) – *Unbalanced* input,
    - left channel volume (0 – 100%),
    - right channel volume (0 – 100%),
    - Bass (-10 to +10),
    - Treble (-10 to +10),
- use the so-called "*identify*" function – all LEDs flash.

8 Diode signaling

The amplifier is equipped with 4 indicator lights:

Indicator light	Action	Function
green PWR	lights up permanently	the device is turned on
blue DMX	blinking	receiving DMX signal
	doesn't light up	no DMX signal
yellow CLIP	blinking / lights up permanently	overdriven signal*
red ERR	lights up permanently	There is an error in the device, e.g. the temperature has been exceeded

* – the audio signal is overdriven, cut off at the peaks, causing distortion (clipping)

NOTE! After powering up, the display turns off after 30 seconds of inactivity. If the user has used the programming keys, the screen will turn off after 5 minutes. The device continues to operate without affecting other parameters. To restore the backlight, press any key.

9 Connecting the DMX signal

The PX865 must be connected to the DMX line in series, without any branches on the control cable. This means that you need to connect a control cable to the ***DMX IN*** pins on the PX865 and then run it from the ***DMX THRU*** pins to the next DMX receivers.

If the PX865 is the last device in the DMX line, a terminator – a 120 Ohm resistor – should be connected to the "**+**" and "**-**" terminals of the ***DMX THRU*** block.

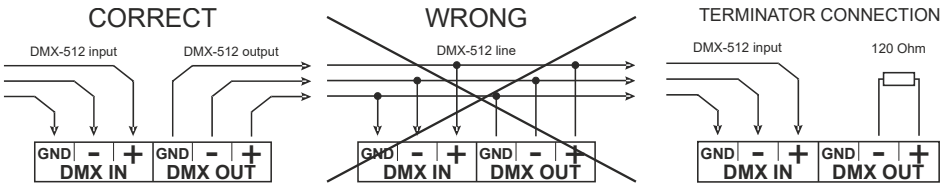

10 Connection scheme

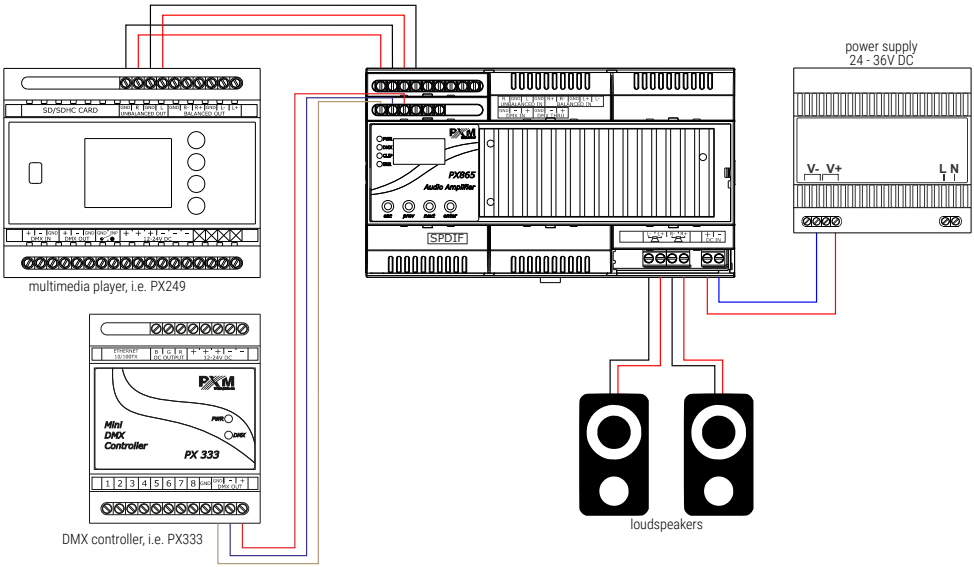

11 Dimensions

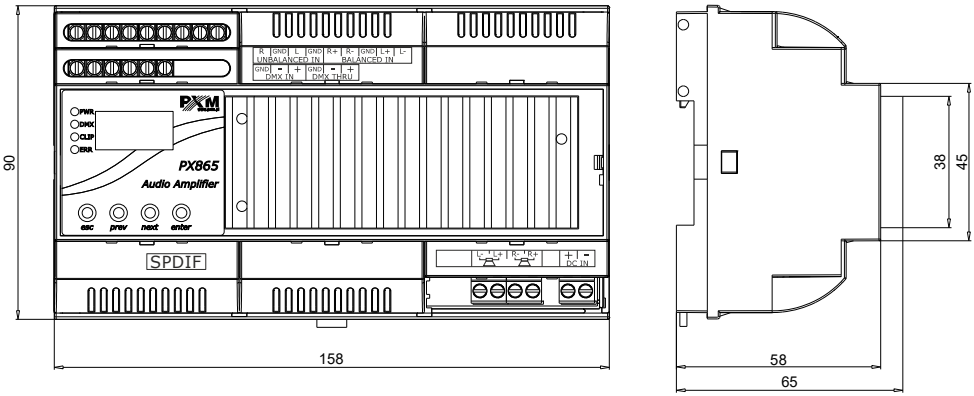

12 Technical data

type	PX865
power supply	24 – 36V DC
DMX IN / OUT channels (occupied)	512 / 512 (2 / 4 / 5)
RDM protocol support	yes
control	DMX
programming	display and 4 buttons RDM
power amplifier output stage	Class D
amplifier power	2 x 100W*
gain	26dB
input sensitivity	balanced: 0 dBu (0.775V RMS) unbalanced: 0 dBu (0.775V RMS)
frequency response	20Hz – 22kHz
load impedance	4 or 8 Ohm
input connectors	1 x S/PDIF 1 x balanced audio connector (screw connectors) 1 x unbalanced audio connector (screw connectors)
output connectors	loudspeaker (screw connectors)
DMX connectors	screw connectors
power consumption	max. 200W (36V DC at full RMS)
weight	0.5kg

dimensions	width: 157.5mm (9 DIN modules) height: 89.5mm depth: 58mm

* – power determined on the basis of RMS (Root Mean Square), i.e. a method of determining the effective value of a signal, which allows determining the actual, continuous power delivered by the amplifier to the loudspeakers.

Podłęże, 09.04.2026

DECLARATION OF CONFORMITY

PXM Marek Żupnik spółka komandytowa
Podłęże 654, 32-003 Podłęże

we declare that our product:

Product name:	Audio Amplifier 2 x 100W RMS
Product code:	PX865

meets the requirements of the following standards, as well as harmonized standards:

PN-EN IEC 63000:2019-01	EN IEC 63000:2018
PN-EN IEC 62368-1:2024-06	EN IEC 62368-1:2024
PN-EN 55035:2017-09	EN 55035:2017
PN-EN IEC 61000-6-1:2019-03	EN IEC 61000-6-1:2019
PN-EN IEC 61000-6-3:2021-08	EN IEC 61000-6-3:2021
PN-EN IEC 60268-3:2018-10	EN IEC 60268-3:2018

and meets the essential requirements of the following directives:

2011/65/UE DIRECTIVE OF THE EUROPEAN PARLIAMENT AND OF THE COUNCIL of 8 June 2011 on the restriction of the use of certain hazardous substances in electrical and electronic equipment
Text with EEA relevance.

2014/30/UE DIRECTIVE OF THE EUROPEAN PARLIAMENT AND OF THE COUNCIL of 26 February 2014 on the harmonization of the laws of the Member States relating to electromagnetic compatibility (recast)
Text with EEA relevance.

2014/35/UE DIRECTIVE OF THE EUROPEAN PARLIAMENT AND OF THE COUNCIL of 26 February 2014 on the harmonization of the laws of the Member States relating to the making available on the market of electrical equipment designed for use within certain voltage limits

PXM
Marek Żupnik spółka komandytowa
32-003 Podłęże, Podłęże 654
NIP 677-002-54-53



mgr inż. Marek Żupnik.